EUD-2018023-00

SmartScanNG²

Operator's Guide for Union Pacific

23 January 2018

© 2018 Southern Technologies Corporation (STC). All rights reserved.
Printed in the USA.

Because products evolve and system configurations change, this manual may not be an exact representation of the products and systems that you are using.

Software Version at the time of this publication
UP_00-16 2017-12-06

STC assumes no responsibility for errors or omissions in this document. Nor does STC make any commitment to update the information contained herein.

Product and company names mentioned herein are trademarks or registered trademarks of their respective owners.

WARNING!

Contact with electrically active parts could result in sparks, burns, and electric shock. Because of this, you should avoid all electrical hazards when installing, wiring, operating, and maintaining the SmartScanNG² system. Failure to do so could result in damage to the equipment or serious injury to you.

NOTICE:

If equipped with an AEI subsystem, the user is required to obtain a Part 90 site license from the FCC to operate in the United States. See product label for FCC ID number. Access the FCC Web site https://www.fcc.gov/licensing-databases/forms for additional information concerning licensing requirements.

Users in all countries should check with the appropriate local authorities for licensing requirements.

Southern Technologies Corporation

6145 Preservation Drive, Chattanooga, TN 37416

web: www.southern-tech.com

email: stcemail@southern-tech.com

fax number: 423-499-0045

telephone number: 423-892-3029

Contents

This section lists the headings of this guide in sequential order with their page references.

1.0 Introduction 7
1.1 Purpose of This Guide 7
1.2 SmartScanNG² 7
1.3 General Specifications - SmartScanNG² 9
1.4 Cautions 10
1.5 Disclaimers 10
1.6 How to Comment on This Guide 10
1.7 How to Order More Copies of This Guide 10
1.8 Standard Warranty 11
2.0 Defect Detection 13
2.1 System Activation 13
2.2 System Deactivation 14
2.3 Speed Calculation 14
2.4 Train Direction 14
2.5 Transducer Pulse Processing 15
2.6 Axle Scanning 16
2.7 Hot Bearing Alarms 17
2.7.1 Bearing Scan Process 17
2.7.2 Referencing System 19
2.7.3 Pyrometer Linearity 19
2.8 Hotwheel Alarms 20
2.9 Auxiliary Alarms 21
3.0 Display Panel 23
3.1 LED Indicators 23
3.2 Keypad & Display 24
3.3 System Functions 25
3.3.1 Radio Test 25
3.3.2 Scanner Cal. Menu 26
3.3.3 Network Menu 26
3.3.4 Radio IO Status Menu 26
3.3.5 Volume Menu 27
3.3.6 System IO Status Menu 27
3.3.7 Test Train 28
3.3.8 Efficiency Test 29
3.4 System Health Menu 30
4.0 Serial Interface 31
4.1 Main Menu 32
4.2 Setup Menu 34
4.2.1 Date and Time 36
4.2.2 Site ID 38
4.2.3 Milepost/Kilometer Post (MP/KP) 38

4.2.4 Track Designation 39
4.2.5 Track Direction 40
4.2.6 Alarm Settings 40
4.2.7 Equipment Settings 49
4.2.8 Messages 59
4.2.9 AEI Reader Settings 65
4.2.10 Load Default Setup Parameters 68
4.2.11 COM1, COM2, COM3, COM4, COM5, & COM6 71
4.2.12 Network Settings 72
4.2.13 Talker Mode 74
4.2.14 Velocity 75
4.2.15 Multitech 75
4.2.16 Wind Settings 76
4.3 System Functions Menu 79
4.4 Replay Train Announcements 92
4.5 System Security: 93
5.0 Web/WiFi User Interface 95
5.1 Train Data 97
5.2 System Status 98
5.3 Configuration 99
5.4 System Event Log 112
5.5 Maintenance Info 113
5.6 System Functions 114
5.7 Software Update 115
5.8 Auto Calibration 116
6.0 Producing Reports 117
6.1 Train Summary Report 119
6.2 Train Detail Report 123
6.3 Exception Summary Report 130
6.4 Exception Detail Report 134
6.5 Abbreviated Exception Detail Report 138
6.6 System Status Report 141
6.7 Last Train Report 145
6.8 Range of Trains Report 145
6.9 Train DSRs 146
6.10 AEI Diagnostic Detail Report 148
6.11 Event Log Report 153
7.0 Radio Announcements 155
7.1 Arrival Messages 156
7.2 Real-Time Messages 156
7.3 Post-Train Messages 157
7.3.1 Nothing Detected 159
7.3.2 Only an Integrity Failure Detected 160
7.3.3 Exception Alarms Detected 161
7.4 Rebroadcasting Post-Train Messages 167
8.0 Scheduled Maintenance 169
9.0 Customer Service 187
9.1 Reaching STC 187

9.2 Returning Equipment for Repair 187
9.3 Reporting Problems or Suggestions 188
9.4 Ordering Spare Parts 188
9.5 Checking on Shipments and Orders 188
Appendix A System Alarms 189
A.1 AC Power Off Alarm 189
A.2 Advance Turn-On Failure Alarm 189
A.3 AEI Subsystem Alarms 189
A.4 Ambient Temperature Probe Unreliable Alarm 190
A.5 Blind Pyro Alarm 190
A.6 Cold Rail Alarm 190
A.7 Cold Resistor Alarm 190
A.8 Cold Wheel Scanner Resistor Alarm 191
A.9 Efficiency Test Panel in Use Alarm 192
A.10 Equal Heats Test Failed Alarm 192
A.11 Highrange Transducer Miscounts Alarm 192
A.12 Integrity Failure Alarm 192
A.13 Low Battery Alarm 193
A.14 Midrange Transducer Miscounts Alarm 193
A.15 Presence Detected On Adjacent Track Alarm 193
A.16 Pyrometer Noise Filtered Rail Alarm 193
A.17 Pyrometer Noise Filtered Wheel Alarm 194
A.18 Rail Resistor Test Overridden Alarm 194
A.19 Reverse Direction Detected Alarm 194
A.20 Short Train Alarm 195
A.21 Stuck Dragger Recovered Alarm 195
A.22 Test Train Alarm 195
A.23 Successive Cold Wheel Resistors Exceeded Alarm 195
A.24 Wheel Resistor Test Overridden Alarm 195
Appendix B Integrity Failures 197
B.1 Dead Battery Alarm 197
B.2 Dead Resistor Alarm 197
B.3 Highrange Transducer Miscounts Alarm 197
B.4 Max Equal Heat Test Failures Exceeded Alarm 198
B.5 Maximum Exception Alarms Exceeded Alarm 198
B.6 Midrange Transducer Miscounts Alarm 198
B.7 Pre-train Stuck Dragger Alarm 198
B.8 Pre-train Stuck High-Load Detector Alarm 199
B.9 Spike Event 199
B.10 Stuck Dragger During Train Passage Alarm 199
B.11 Pre-train Stuck Wide-Load Detector Alarm 199
B.12 Successive Cold Rails Exceeded Alarm 199
B.13 Successive Cold Resistors Exceeded Alarm 200
B.14 Train Present on Restart Alarm 200
B.15 Very Slow Train Alarm 200

Appendix C Replacement of Type II Scanners 201
C.1 Bearing Scanners 201
C.2 Wheel Scanners 203
Appendix D Replacement of Type III Scanners 205
D.1 Bearing Scanners 205
D.2 Wheel Scanners 208
Appendix E Calibration of Type II Scanners 211
E.1 Type II Bearing Scanners 211
E.2 Type II Wheel Scanners 216
E.3 Heat Source: Power Cable Warning 220
Appendix F Calibration of Type III Scanners 221
F.1 Bearing Scanners 221
F.2 Wheel Scanners 226
F.3 Heat Source: Power Cable Warning 230
Appendix G Lens Cleaning of Scanners 231
G.1 Type III Scanners 231
G.2 Type II Scanners 233
Appendix H Predictive Gate Scanning 235
H.1 Overview 235
H.2 Scanning Process 236
H.3 Reporting the Pyrometer Saturation Alarm 237
Appendix I 2500-402 Spacer Kit Installation 239
Appendix J Scanner Resistor Baseline Acquisition 241
J.1 Cover the Scanners 241
J.2 Bungalow Speaker Announcements 242
J.3 Processing Resistor Baseline Results 243
Appendix K Communications Ports 245
Appendix L Scanner Base Drain Hole 247
Appendix M Calibration of Track Circuit 249
Index 251

1.0 Introduction

This section summarizes the purpose of this guide, describes the SmartScanNG² system, tells how to comment on this guide, and tells how to order more copies of this guide. It also covers the cautions and disclaimers of which the customer should be aware.

1.1 Purpose of This Guide

The technical staff at Southern Technologies Corporation (STC) created the SmartScanNG² system. This guide describes that system.

The SmartScanNG² system monitors moving trains and reports certain conditions detected on these trains. Parts of the system, like the bearing scanners, are installed on the tracks. Other parts of the system, like the controller module, are installed near the tracks. Most nontrackside components are factory installed inside a wayside enclosure (aka bungalow). Therefore, the installation of these already installed components isn't covered in this guide.

The SmartScanNG² system is modular and firmware driven. Hardware and firmware can be changed to meet the unique needs of a given railroad. Thus, some of the components that make up a SmartScanNG² system differ from railroad to railroad.

This guide is for those who purchase, install, maintain, troubleshoot, manage, or use the SmartScanNG² system as configured for UP Railway.

1.2 SmartScanNG²

The SmartScanNG² system is a full-featured detection and reporting system. It monitors moving trains, providing real-time detection of:

- Overheated bearings
- Overheated wheels, when wheel scanners are installed and enabled
- Dragging equipment, when dragging-equipment detectors are installed and enabled
- Shifted loads, when wide-load detectors are installed and enabled
- Oversized loads, when high-load detectors are installed and enabled
- Automatic Equipment Identification (AEI) tags, when AEI hardware and firmware are installed and enabled
- Train Direction
- Train Speed

The SmartScanNG² system runs well in the harsh environments found along right of ways. It runs under the most adverse weather conditions, functioning over a temperature range of -40°F to +160°F (-40°C to +71°C). It runs in high vibration situations. It runs unattended, carrying out all tasks without human intervention.

The SmartScanNG² system monitors trains traveling from 7 to 90 mph (11.3 to 145 kph). It monitors trains heading in either direction on the track.

When the SmartScanNG² system detects a defect, it informs the crew of the affected train. This is done by a voice transmission over an assigned radio channel. The voice is computer generated from previously digitized human speech. It tells the crew the milepost of the reporting SmartScanNG² system, a warning that a defect has been detected, and other defect-related information. When no defect is detected, the voice tells the crew that the train was scanned and found free of defects.

There are three types of messages. Real-time messages are announced as the train is passing over the site. Post-train messages are announced after the train has left the site and all the recorded train data has been processed by the SmartScanNG² system. When enabled, there are also arrival messages. Arrival messages are announced as the train enters the site. The content and use of these three message types are railroad specific.

The results of train scans are also stored for later use. With this stored data, the system can create formatted reports. To get them at the site, you need a computer. With a modem or network connection and a computer, you can retrieve them remotely.

1.3 General Specifications - SmartScanNG²

Maximum Train Length	Successfully scanned computer simulated trains with axle counts greater than 4000 axles.
Input Voltage - DC	Controller Module and Chassis: 10 to 30 VDC. Maximum system current, including two bearing scanners and two wheel scanners, with train present and radio transmitting approximately 11.7 amps. Idle current 900mA.
Input Voltage - AC	100 – 130 Volts @ 15 Amps, 50-60Hz
Input Voltage Protection	Circuit Breaker, Self-Restoring Fuses, Metal Oxide Varistors, Reverse Polarity Protected
Processors	Two Embedded Processor Modules, each with the following features: Motorola ColdFire® Processor, 32-bit, 250MHz clock (125MHz bus), 64MB DDR2 RAM, 32MB non-volatile Flash, 16GB Micro SD. Non-volatile time/date, system configuration, and train storage.
Serial Communications Ports	Up to six RS-232 ports available, depending on internal options, and one RS-485 port — all with standard male D-Sub 9 connectors.
User Accessible Inputs	2 Bearing Scanner, 2 Wheel Scanner, 2 Wheel Gating Transducer, 2 Wheel Advanced Transducer, 8 Opto-Isolated Digital, 1 Precision Ambient Temperature Probe, 1 Train Presence Detection - Internal 2-Wire Audio Overlay Track Circuit
Network	One 10/100 Mbps Ethernet port with a standard RJ45 connector for networking capabilities. One RJ45 connector for access to the optional internal Velocity Module.
Voice Communications	Internal VHF Radio Transceiver: Ritron DTX-160 – 8 channels, 6 watts, narrowband, 134MHz to 176MHz. Additionally equipped with a radio interface for customer specified analog or NXDN™ digital mobile radio
Dual-tone Multi-frequency Decoder	DTMF decoder recognizes all standard digits — 0 through 9, #, *, A, B, C, D. (Reception of a customer specified sequence of digits triggers a rebroadcast of the last voice announcement.)
Wi-Fi	The NG² supports wireless standards IEEE 802.11 b/g/n with 2.4GHz RF band power amplifier. Secure data communications with 128-bit WEP, WPA-PSK (TKIP), WPA2-PSK Authentication. Wi-Fi can be enabled/disabled from the keypad.
Operating Temperature	–40°C to +71°C, Fanless Operation, Industrial Temperature Range
Size	15.5”W x 22.0”H x 4.5”D
Weight	31 lbs.
Finish	White powder coat over stainless steel.
Manufacturer	Southern Technologies Corporation, Chattanooga, Tennessee

1.4 Cautions

Contact with electrically active parts could result in sparks, burns, and electric shock. Because of this, you should avoid all electrical hazards when installing, wiring, operating, and maintaining the SmartScanNG² system. Failure to do so could result in damage to the equipment or serious injury to you.

In operation, batteries generate and release flammable hydrogen gas, which, if ignited by a burning cigarette, naked flame, or spark, may cause battery explosion with dispersion of casing fragments and corrosive liquid electrolyte. So, carefully follow manufacturer's instructions. Keep all sources of gas ignition away from the batteries and do not allow metallic articles to contact the negative and positive terminals of a battery at the same time.

1.5 Disclaimers

The correct use of this guide, the environmental conditions at the time of installation, the method of installation itself, and the installation of customer-supplied components are beyond the control of STC. So too are the correct use and maintenance of all or part of the SmartScanNG² system. Therefore, the installer, user, and maintainer must assume the risk of any injury that might occur during installation, use, and maintenance of all or part of the SmartScanNG² system. STC assumes no risk, liability, or responsibility for errors and omissions on the part of the installer, user, or maintainer.

1.6 How to Comment on This Guide

We want to hear from you. Tell us what you like or don't like about this guide. Send your comments to:

Southern Technologies Corporation
Technical Publications Department
6145 Preservation Drive
Chattanooga, Tennessee 37416-3638
USA

All comments become the sole property of STC and none will be returned.

1.7 How to Order More Copies of This Guide

When placing an order for more copies of this guide, refer to the order number shown on the cover of this guide. To request pricing and delivery, call 423-892-3029, fax 423-499-0045, or send email to stcemail@southern-tech.com. Electronic copies of this guide are also available.

1.8 Standard Warranty

Systems manufactured by Southern Technologies Corporation carry a 14-month warranty from date of shipment. Warranty is limited to repair or replacement, at the sole discretion of STC, of any goods found to be defective in either materials or workmanship during the 14-month period following shipment. Warranty does not apply to product with signs of obvious abuse, or product that has been improperly installed.

STC warrants that goods represented by this warranty statement have been designed and manufactured with all reasonable care and attention to appropriate regulatory documents. STC makes no representation that the goods covered by this warranty are suitable for the application they are used for. Application of the goods is at the sole discretion of the purchaser.

Purchaser is responsible for shipment of the defective product to STC. STC will pay the return shipping charges.

Products purchased from others, but included in STC systems, carry the original manufacturer's warranty, typically 12 months. Warranty claims for these products must be made directly to the original equipment manufacturer.

2.0 Defect Detection

This section describes the Exception Alarms (e.g. defect alarms) as well as miscellaneous train scanning features.

2.1 System Activation

System activation is the process used to detect train presence and to prepare for train scanning. It is during the scanning process that the system checks for defects.

The SmartScanNG² system is equipped with one of two primary means of train arrival detection, which are the track circuit and the advance transducers. In case of a failure in the primary detection method, the gating transducers act as a backup to detect train arrival. Once the system senses a train's presence, it enters scanning mode. In other words, the system has activated. It then opens the scanners' shutters, disables their heaters, and waits for further evidence of a train at the site in the form of gating transducer activity.

Once the system is active, it reads pulses from the two rail-mounted gating transducers, which are designated TO1 and TO2. On the rail nearest the wayside enclosure, these transducers are mounted near and to the north or east of the bearing scanner. **TO1** is the gating transducer closest to the bearing scanner. **TO2** is the one farthest from the bearing scanner.

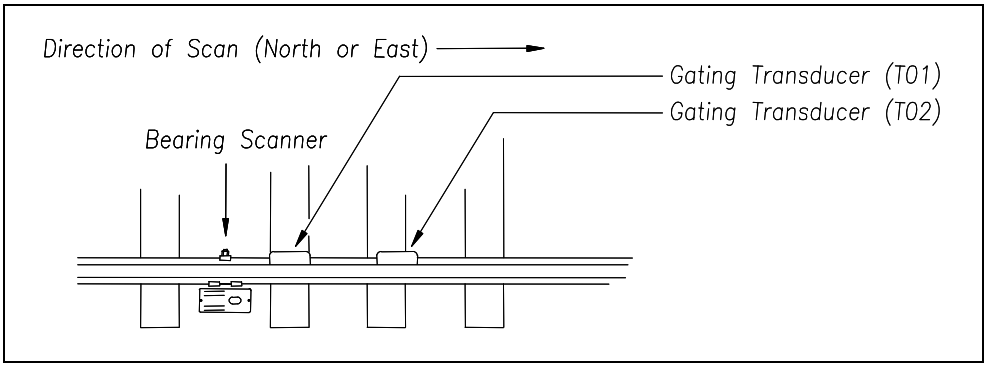

The signals from these gating transducers indicate to the system that passing wheels are in view of the scanners. Furthermore, the speed of the train is determined by using the known distance between TO1 and TO2 versus the time required for a given wheel to pass over them.

Under normal circumstances, four axles must pass over the gating transducers for the system to consider the event a valid train. This prevents maintenance equipment from generating alarms and causing unwanted voice messages on the road channel.

2.2 System Deactivation

System deactivation is the process used to detect the moment that the train exits the site. This happens in one of two ways, and is dependent upon whether the track circuit or one of the transducers activated the system.

If the track circuit activated the system, the system waits for the track-circuit signal to be absent for ten seconds before deactivating. Likewise, if a transducer activated the system, the system waits for ten seconds of inactivity from the gating transducers before deactivating.

2.3 Speed Calculation

A train's minimum, maximum, average, and exit speeds in miles per hour are shown on the reports. The system calculates speed by knowing the distance between the two transducers versus the time that it takes a given wheel to pass over them.

Trains traveling 7 mph or less (11.3 kph) are considered "very slow." After passage of these trains, the phrase "train too slow" is appended to the post-train message (when the Announce Slow Train option is enabled) and a diagnostic message is noted on the Train Detail and Exception Detail reports.

The report fragment below, from the header section of a Train Detail report, shows the location of this message.

```
                    Southern Technologies Corporation
                     Next Generation Detector System
                              TRAIN DETAIL
=========================================================================
                                 .
                                 .
Integrity Failures
-------------------------------------
VERY Slow Train
                                 .
                                 .
                                 .
```

2.4 Train Direction

Train direction is based on whether TO1 or TO2 generated the first gating transducer pulse.

2.5 Transducer Pulse Processing

As a wheel enters the sensing range of a transducer (magnetic), the transducer should respond with a positive going pulse. The polarization of the two wires from the transducer determines if this pulse is positive or negative.

Here is a simple test that you can use to verify the correct polarization of the gating transducers. While watching the TO1 and TO2 LEDs on the display panel, have someone lay a metal wrench on one of the gating transducers. The corresponding LED should briefly light as the wrench touches the transducer. Then lift the wrench up. The LED shouldn't light as the wrench is lifted away. Repeat the test for the other transducer.

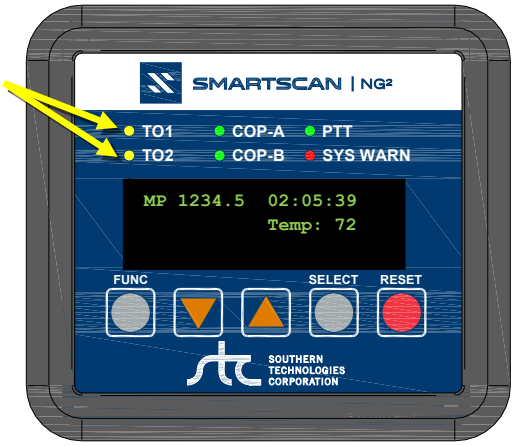

On the Interface board (in the Controller module), the transducer signals undergo RF filtering and amplification with a gain of 30. For validation, the amplified signals are fed into comparators, which create 5-VDC pulses lasting the period of time that the amplified signals remain above 620 millivolts. These 5-VDC transducer signals are feed to the microcontroller for processing.

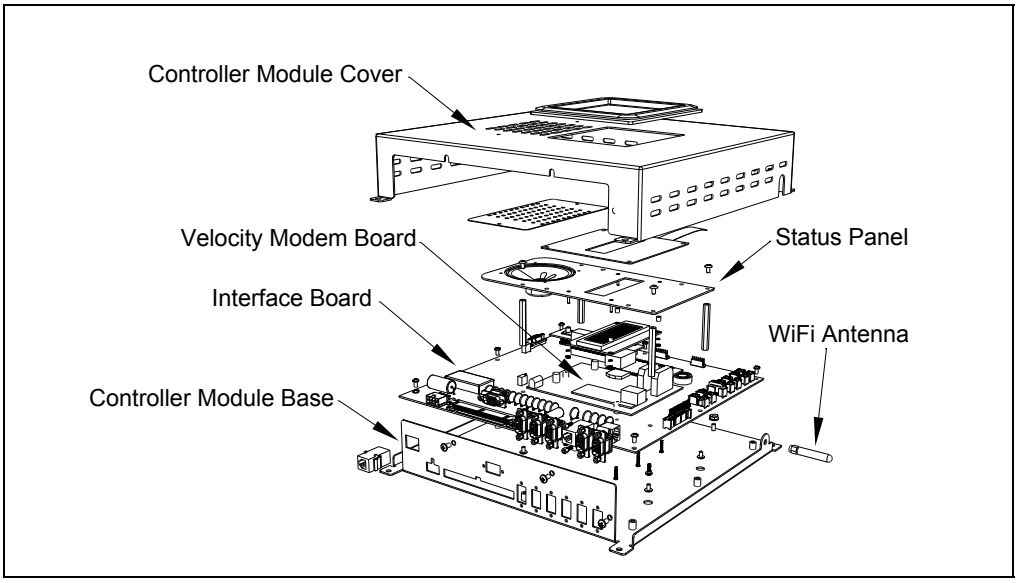

A firmware-controlled feature of the comparator circuit allows adjustment of the threshold voltage based on the speed of the train. Trains traveling less than 20 mph (32 kph) use the 620-millivolt threshold setting for maximum sensitivity. However, faster trains cause the transducers to generate a higher signal voltage, which allows the system to increase the threshold voltage. This improves the signal-to-noise ratio resulting in better signal validation.

Processor-A internally generates interrupts on the positive going and negative going edges of each transducer pulse coming from the comparator. The positive edge of each comparator pulse starts a timer. The timer stops with the detection of a negative going edge. The width of each pulse is a determining factor of signal validity. Three milliseconds or greater is considered to be a valid signal. The firmware rejects any pulse width shorter than 3-milliseconds. Rejected pulses don't increment the transducer counters.

In normal operation, the gating transducers fire in sequence, first one then the other. With 24-inch (61-centimeter) gating-transducer spacing, a wheel passes over both gating transducers before the next wheel passes over a gating transducer. Therefore, two consecutive pulses on the same gating transducer are typically not physically possible. However, in the unlikely event that a gating transducer is ever caused to fire by another source, such as electrical interference from a locomotive's traction motor, a spike-counter for the gating transducer that misfired will be incremented by one. To increment the axle counter, one pulse from each gating transducer must occur in sequence.

2.6 Axle Scanning

The SmartScanNG² system begins sampling bearing and wheel (where wheel scanners are installed) temperatures upon detection of train arrival – when presence goes active **or** when the first wheel of the first vehicle crosses the leading gating transducer. The scanners are sampled continuously until the train exits the site. The signals from the gating transducers indicate to the system when each axle is in the scan path of the scanners. While an axle is between the two gating transducers it is said to be “in the gate”. The heat samples from the bearing and wheel scanners are allocated to a given axle for the time periods immediately preceding the axle entering the gate, while the axle travels through the gate, and immediately following the axle exiting the gate.

The SmartScanNG² system implements a Dynamic Scan Rate (DSR) for sampling of the temperatures detected by the scanners. The rate of scan (sampling) is adjusted, based upon the real-time speed of the train, so that the temperature of each bearing and wheel is sampled once for each half inch of travel. For every axle, a total of 96 samples are collected from each scanner. Forty-eight samples are collected for the time that the axle is between the gating transducers (in the gate), twenty-four samples are collected from the time immediately before the axle entered the gate, and twenty-four samples are collected from the time immediately after the axle exited the gate.

2.7 Hot Bearing Alarms

The SmartScanNG² system checks for hot bearings during the axle scanning process.

There are four types of Hotbox alarms.

Absolute. To trigger an Absolute alarm, a bearing temperature must exceed the limit that was established using the Absolute option of the Alarm Settings Menu. This alarm limit is an offset, in degrees Fahrenheit, above the reference temperature.

Differential. To trigger a Differential alarm, a bearing temperature must exceed the opposite side bearing temperature of the same axle by a differential amount established using the Differential option of the Alarm Settings Menu.

Pyrometer Saturation. To trigger a Pyrometer Saturation alarm, an interaxle bearing temperature must exceed the limit that was established using the Absolute option. If an Absolute alarm or a Differential alarm has already been triggered for the axle, a Pyrometer Saturation alarm isn't generated.

Carside Slope. To trigger a Carside Slope alarm, a bearing temperature must meet or exceed a calculated alarm level and a minimum heat value. The bearing temperature must also be at least twice the opposite bearing's temperature. If an Absolute alarm or a Differential alarm has already been triggered for the axle, a Carside Slope alarm isn't generated. The minimum heat value is established using the Carside Minimum option of the Alarm Settings Menu.

2.7.1 Bearing Scan Process

Bearing scanners are mounted in the center of the crib of two ties spaced at least 14 inches (35.6 centimeters) apart. Both bearing scanners are mounted in the crib immediately ahead of the gating transducers (that is, in the crib immediately to the south or west of the gating transducers). They are mounted directly opposite each other, one on each rail of the track. The hole on the top of the scanner covers faces north or east.

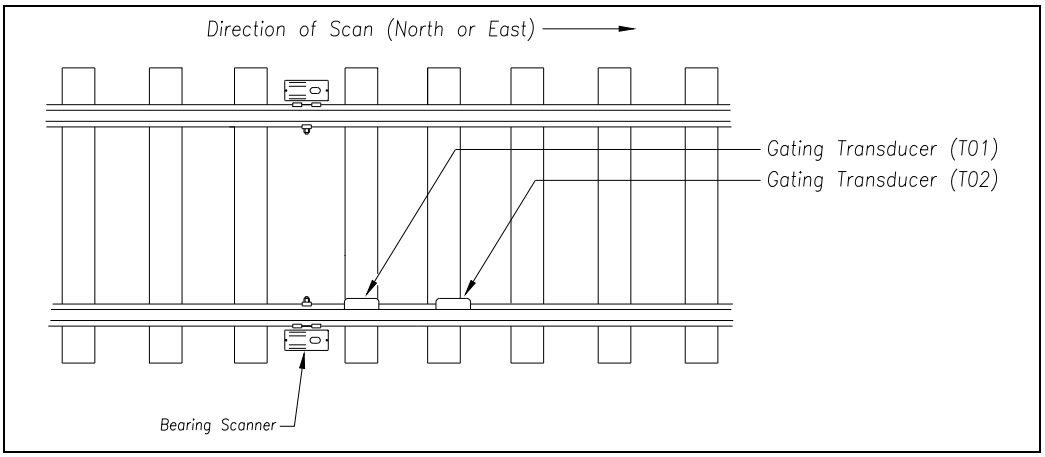

Bearing scanners are aligned to scan the bottom 3.5 inches (8.9 centimeters) of the bearing housing, about 7.25 inches (18.4 centimeters) from the gauge line.

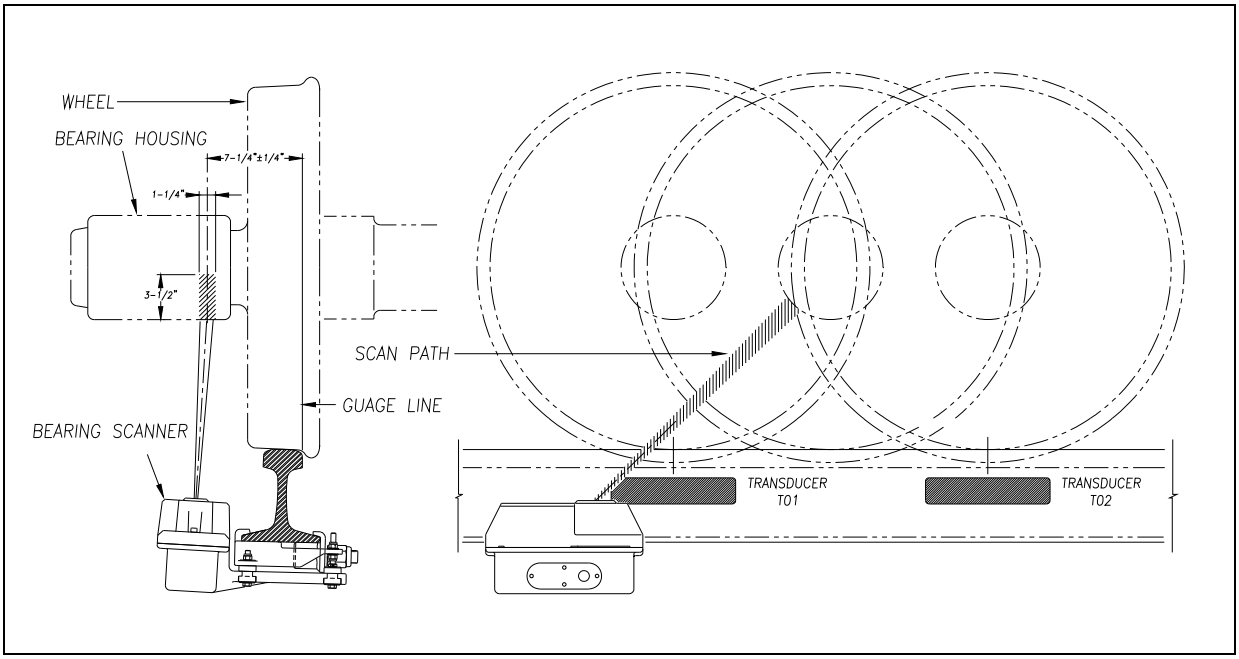

Type II Scanner

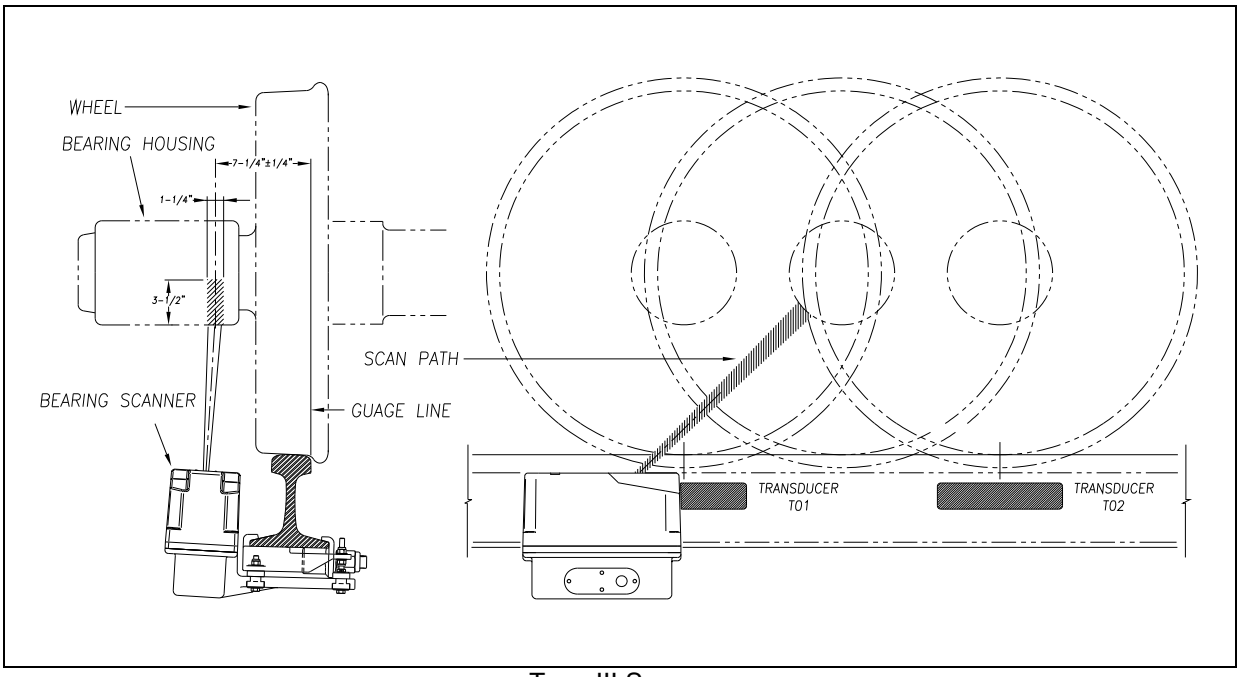

Type III Scanner

2.7.2 Referencing System

Pyrometers measure rapid changes in infrared energy emitted from objects passing through their field of view. The rail-mounted scanners are aligned to take advantage of this characteristic.

When no axle is present between the gating transducers, the scanner typically sees only the undersides of the cars passing over the site. The undersides of the cars are at or near ambient temperature, thus establishing the reference from which the elevated temperatures of bearings are measured. The pyrometers normalize during this time, producing a zero level signal.

Occasionally, the scanners are exposed to infrared emissions that are colder than the underside of the cars. Typically, this occurs in the gaps between cars when the scanners may reference on clear sky. This could present an erroneous reference if a bearing was scanned immediately following a sky shot, resulting in an abnormally high reading for the bearing. The pyrometers have internal circuitry to prevent the reference from shifting below the established zero reference.

When a bearing passes through the field of view of the scanner, a rapid change in temperature is presented to the internal lithium tantalite crystal. This causes the signal level from the pyrometer to increase proportionally to the amount of exposed infrared energy. When an axle is between the gating transducers, the pyrometer signal is sampled at every 1/2 inch (1.27 centimeters) of wheel movement for a total of 48 samples and the maximum signal level is stored. This signal level measured in volts is converted to a digital value and expressed in degrees Fahrenheit above ambient temperature. This value is the basis for the alarm analysis done by the system.

2.7.3 Pyrometer Linearity

The output of the pyrometers is linear across most of the operating speed range of the system. However, the output of the pyrometers is nonlinear at either end of the operating speed range. To compensate for this nonlinear output, the firmware applies a correction factor to the sampled heat value. The correction factor applied to each bearing sample is based on the speed of the bearing (axle's ON time) as it passed through the gate and on the actual value read by the pyrometer. The correction factor is derived from a table that is keyed by the axle's ON time and heat value. Due to the fast nature of this lookup table, linearity compensation is done real-time so that detected alarms reflect the heat value after the linearity step has been done.

2.8 Hotwheel Alarms

When used, wheel scanners are mounted in the center of the crib of two ties spaced at least 14 inches (35.6 centimeters) apart. Both wheel scanners are mounted in the crib between the two gating transducers. They are mounted directly opposite each other, one on each rail of the track. The hole on the top of the scanner covers faces the center of the track.

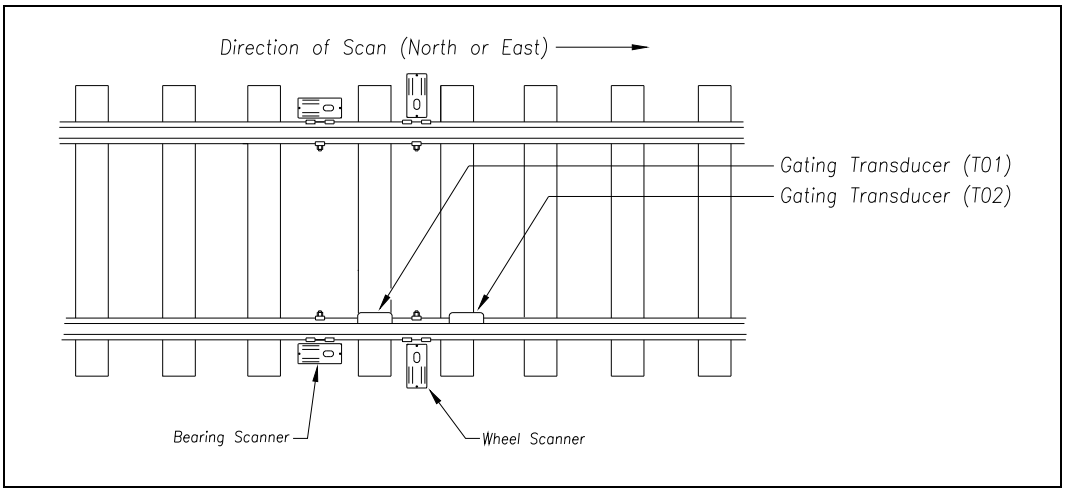

Wheel scanners are aligned to scan about 4 inches (10 centimeters) above the rail.

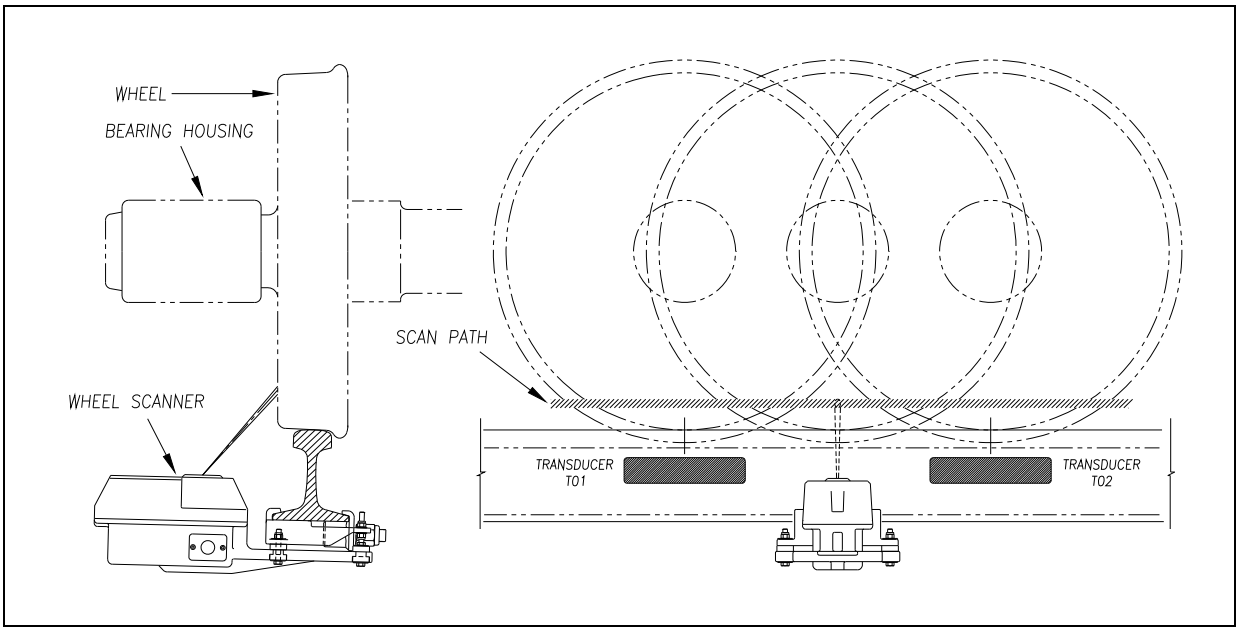

Type II Wheel Scanner

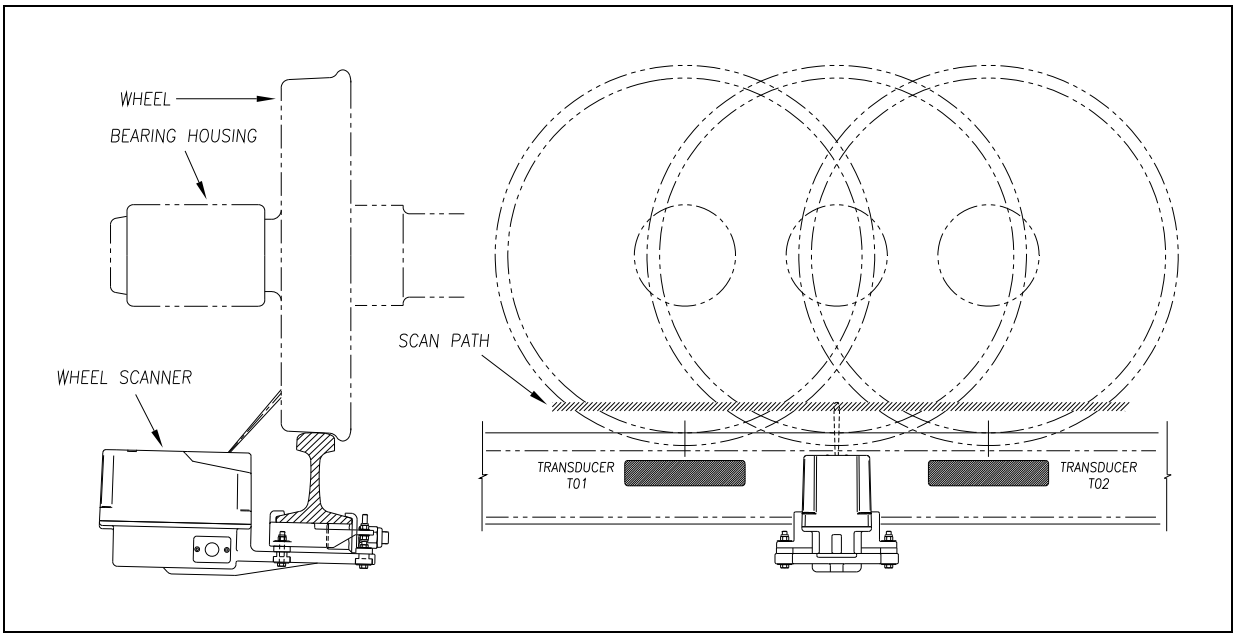

Type III Wheel Scanner

The SmartScanNG² system checks for hotwheels during the scanning process. Scan timing is controlled the same as for the bearing scanners.

Wheel scanning alarms are limited to absolute alarms only. To trigger a Hotwheel alarm, wheel scanners must be properly installed, hotwheel detection must be enabled, and a wheel temperature must exceed the limit that was established using the Hotwheel option on the Alarm Settings menu. This alarm limit is an offset, in degrees Fahrenheit, above the ambient temperature. Hotwheel detection is enabled using the Hotwheel option on the Equipment Settings menu.

2.9 Auxiliary Alarms

The SmartScanNG² system can support input from as many as four external alarm devices. Any device that provides an open relay contact upon alarm detection can be supported by the system. Auxiliary alarms supported by the SmartScanNG² system are:

Dragging Equipment. To trigger a Dragging-Equipment alarm, a dragging-equipment detector must be properly installed, dragging-equipment detection must be enabled, and the SmartScanNG² system must sense an open relay contact from the dragging-equipment detector. Dragging-equipment detection is enabled using the Dragger option on the Equipment Settings menu.

High Load (oversized loads). To trigger a High-Load alarm, a high-load detector must be properly installed, high-load detection must be enabled, and the SmartScanNG² system must sense an open relay contact from the high-load detector. High-load detection is enabled using the High-Load option on the Equipment Settings menu.

When a high-load detector is configured for trip-wire operation, the SmartScanNG² system only records one High-Load alarm, regardless of the high-load signal status. This is because you can only break a wire once.

When a high-load detector is configured for light-beam operation, the SmartScanNG² system records every High-Load alarm that occurs. This involves a caveat that the system won't flag High-Load alarms on consecutive axles. At least one unalarmed axle must separate the alarmed axles. Regardless of the number of detected High-Load alarms, it only announces a maximum of two.

The mode of operation (light beam or trip wire) isn't relevant when the SmartScanNG² system finds a Stuck High-Load Detector Pretrain alarm. When this occurs, the system flags the pretrain condition as an integrity failure, disables high-load scanning for the remainder of the train, and doesn't assign a high-load condition to any of the axles.

Wide Load (shifted loads). To trigger a Wide-Load alarm, two wide-load detectors (one on each side of the track) must be properly installed, wide-load detection must be enabled, and the SmartScanNG² system must sense an open relay contact from either of the wide-load detectors. Wide-load detection is enabled using the Wide-Load option on the Equipment Settings menu.

When a wide-load detector is configured for trip-wire operation, the SmartScanNG² system only records one Wide-Load alarm, regardless of the wide-load signal status. This is because you can only break a wire once.

When a wide-load detector is configured for light-beam operation, the SmartScanNG² system records every Wide-Load alarm that occurs. This involves a caveat that the system won't flag Wide-Load alarms on consecutive axles. At least one unalarmed axle must separate the alarmed axles. Regardless of the number of detected Wide-Load alarms, it only announces a maximum of two.

The mode of operation (light beam or trip wire) isn't relevant when the SmartScanNG² system finds a Stuck Wide-Load Detector Pretrain alarm. When this occurs, the system flags the pretrain condition as an integrity failure, disables wide-load scanning for the remainder of the train, and doesn't assign a wide-load condition to any of the axles.

Both high-load detectors and wide-load detectors must be either trip-wire detectors or light-beam detectors. The selection of trip wire or light beam is done using the Clearance Type option on the Equipment Settings menu.

3.0 Display Panel

Located on front of the SmartScanNG² Controller Module is the Display Panel. Its status indicators and display module provide a snapshot of the overall system health. As a convenience, the Display Panel also provides a user interface to execute some frequently used system functions (i.e. Auto Cal, Radio Test, etc.).

SmartScanNG² Display Panel

3.1 LED Indicators

There are six LED status indicators located above the OLED display.

LED	Meaning when Lit
TO1	Indicates wheel sensor TO1 is active.
TO2	Indicates wheel sensor TO2 is active.
COP-A	Indicates the status of Processor-A. If the CPU is running its program correctly, the LED blinks on and off. If the program isn't operating as expected, the LED is lit solid, or isn't lit at all.
COP-B	Indicates the status of Processor-B. If the CPU is running its program correctly, the LED blinks on and off. If the program isn't operating as expected, the LED is lit solid, or isn't lit at all.
PTT	Indicates the radio PTT is active.
SYS WARN	Indicates that a system warning has been detected.

3.2 Keypad & Display

The display assembly includes a 4-line 20-character OLED display and a five key membrane switch panel. If unused for five minutes, the display times out to conserve power. Press any key to turn the display back on.

Keypad Switch	**Function**
FUNC	The function key toggles from the home screen (described below) to the Main Menu. It also serves as “Back” key in the system submenus to return to the previous menu level.
▼ (Arrow Down)	Scroll down menu options.
▲ (Arrow Up)	Scroll up menu options.
SELECT	Selects highlighted menu option.
RESET	Initiates system reset.

The home screen displays milepost, time, and temperature.

```
MP 1234.5  02:05:39
           Temp: 72
```

If a system warning has been detected, the display will indicate “Check System Health” at the bottom of the screen.

Menu Navigation:

- Press the **FUNC** key to toggle from the home screen to the Main Menu or to back out of submenus.
- Use the ▲UP and ▼DOWN keys to move the ► pointer next to the desired menu option.
- Press the **SELECT** key to choose the menu option. The “↓” symbol on the display screen indicates that there are more options available if you scroll down. Likewise, the “↑” symbol indicates more options are available if you scroll up.

```
Main Menu
 ►Sys. Health Menu
  Reset Sys. Health
↓ Radio Test
```

3.3 System Functions

Several system functions can be performed from the display panel. Available options are:

- System Health Menu
- Radio Test
- Scanner Cal. Menu
- Network Menu
- Radio IO Status
- Volume Menu
- Input Menu
- Test Train
- Tag Reader Test
- Efficiency Test

3.3.1 Radio Test

To perform a radio test, go to the Main Menu and select **Radio Test**

```
Main Menu
↑►Radio Test
  Scanner Cal. Menu
↓ Network Menu
```

The Radio Test option is used to broadcast a short message through the speaker and through the radio. Using this option lets you verify that the speaker and radio are working properly.

At single-track sites, the text of the message is usually "Testing, U P Detector, milepost (milepost number), testing, one, two, three, four, five, four, three, two, one, testing, detector out." At multitrack sites, the text of the message is usually "Testing, U P Detector, milepost (milepost number), track (track designation), testing, one, two, three, four, five, four, three, two, one, testing, detector out."

If the system isn't currently making any other voice announcements, it begins the Radio Test announcement.

If the system is currently making a voice announcement, the radio test will begin after the announcement.

While listening to the message, look at the PTT LED on the display panel.

The **PTT LED** should be lit. If this LED isn't lit, the system's ability to send a message to the radio might be inhibited by the Radio Inhibit option on the System Functions menu. If the radio is inhibited, the results of this check are invalid.

3.3.2 Scanner Cal. Menu

The SmartScanNG² system self-calibrates its pyrometer interface circuitry. You need only put a preheated calibrated heat source on a scanner and place the system in autocalibration mode. The system then scans all pyrometer inputs until the signal from the calibrated heat source is located. The necessary adjustments to the related interface circuitry are automatically made while the system monitors its own progress by analyzing changes in the heat signals.

From the Main Menu, select **Scanner Cal. Menu.** This prompt appears.

```
Scanner Cal. Menu
 ►N Rail: Type III
  S Rail: Type III
↓ N Wheel: Type III
```

Select an individual scanner to change the scanner type or Auto Cal to begin searching for heat on all scanners. Once the procedure has been completed, autocalibration mode is disengaged and the calibration results are displayed.

For a detailed description of the auto-calibration procedures, go to **Appendix E Calibrating of Type II Scanners** or **Appendix F Calibrating of Type III Scanners**.

3.3.3 Network Menu

From the Main Menu, select the **Network Menu** option to view/change network settings.

Available options are:

- Wi-Fi (on/off)
- IP Address
  - Ethernet address
  - Wi-Fi
- DHCP (on/off)
- TELNET port
- HTTP port
- HTTPS port

3.3.4 Radio IO Status Menu

From the Main Menu, select Radio Menu to view the radio screen. This screen will display certain radio status information such as:

- “PTT Disabled” if Radio Inhibit is active
- “Holdoff Active” if holdoff is enabled
- “CD active” when radio has detected an active carrier signal

Press SELECT key to initiate Radio Test.

3.3.5 Volume Menu

From the Main Menu, select **Volume Menu** to view/change speaker volume.

```
Vol: 5 [|||||     ]
Up/Down = change
Select = Radio test
Func = Back
```

There are ten volume settings (0 – 9) with level 9 being maximum volume. Press the ▲UP key to increase volume level. Press the ▼DOWN key to decrease the volume level. With each change, the detector broadcasts the new volume setting at the new volume level. If an announcement is in progress, changes to the volume level occur in real time.

Pressing the **SELECT** key initiates a radio test.

Use this option to verify that the speaker volume is at a sufficient level. "Press the **FUNC** key to exit the menu.

3.3.6 System IO Status Menu

The Input Menu function is a useful tool for the diagnostic testing of inputs. From the Main Menu, select **Input Menu** to monitor inputs.

```
System IO Status

DR, TO1
```

There are thirteen inputs monitored. Inputs appear on screen only while they are active. If no inputs are active, “None” appears. Available inputs are:

TO1, TO2, TC (presence), A1 (advance1), A2 (advance2), S1 –S4 (spare1 thru spare4), DR (dragger), HI (hi load), W1 (wide1), and W2 (wide2),

3.3.7 Test Train

In Test Train Mode, the system opens all the shutters and simulates transducer pulses. During this time, a person can check various aspects of the installed components. The train is marked as a test train. There won't be any voltage (simulated heat) applied to the scanner inputs.

This test gates 256 simulated axles.

From the Main Menu, select **Test Train** to initiate test.

```
Main Menu
  Volume Menu
  System IO Status
↓►Test Train
```

This prompt will appear:

```
Are you sure?
  ►Yes
   No
```

During a test train, the TO1 & TO2 LEDs on the Display Panel will flash with each simulated axle.

3.3.8 Efficiency Test

The Efficiency Test is used to monitor train crew performance during a hotbox or dragging-equipment stop. When armed, the system generates an alarm on the next train and at the car number specified.

From the Main Menu, select **Efficiency Test** to configure and arm the test.

```
Main Menu
  Test Train
  Tag Reader Test
↓►Efficiency Test
```

This prompt will appear:

```
Efficiency Test Menu
 ►Armed:          No
  Car Number:      1
  Alarm:     Dragger
```

Use the Alarm and Car Number options to select the type of alarm generated and the car number on which to place the alarm. With the alarm configuration complete, use the Arm option to arm the test. The firmware reads the Efficiency Test settings only when arming the test, so the desired car number and alarm type must be set before arming the test.

Select Armed. This prompt will appear:

```
Arm? Are you sure?

  ►Yes
   No
```

CAUTION!
Unless authorized to do so, do <u>not</u> arm this function. Doing so will stop a train.

3.4 System Health Menu

The System Health Menu provides a snapshot of the system's general health. Each system health check displays a status of "GOOD" or "BAD" based on trending information derived from system alarms, integrity failures, and other monitored data. If a system warning has been flagged, the **SYS WARN** LED will be lit and the "Check System Health" message will be displayed on the bottom text line of the home screen.

1. From the Main Menu, place the ►pointer next to **Sys. Health Menu.**

```
Main Menu
 ►Sys. Health Menu
  Radio Test
↓ Scanner Cal. Menu
```

2. Press the **Select** key. The status of the following system health checks are displayed:

   NumTrains, LowMiscount, HighMiscount, AvgTemp0, AvgTemp1, AvgTemp2, AvgTemp3, ColdRail0, ColdRail1, ColdRail2, ColdRail3, Avg Miscount, and Batt. prcnt.

```
Sys. Health Menu
 ►NumTrains     Good
  LowMiscount   Good
↓ HighMiscount Good
```

   If any of these system health checks indicate a "Bad" status, select that item to display more detailed information.

3. To reset system health, navigate to the Main Menu and place the ► pointer next to the **Reset Sys. Health.**

```
Main Menu
  Sys. Health Menu
 ►Radio Test
↓ Scanner Cal. Menu
```

4. Press the **Select** key. When prompted, select **Yes** to reset system warnings and zero all health check counts.

```
Are You Sure?
 ►Yes
  No
```

4.0 Serial Interface

The serial interface allows **on-site** and **off-site** communication with the system. This interface is one of two methods available for viewing reports and modifying system parameters. The other method is the Web/Wi-Fi interface.

Most sites are equipped with Ethernet service that provides remote communications capabilities. If not, you cannot communicate with the system **off-site**.

To use the interface locally, you need:

- A computer
- Communications software, which is installed on the computer
- A cable from the computer to a communications port on the Controller module

For remote access via network:

- A computer with communications software and internet connectivity
- An Ethernet connection at the SmartScanNG² controller

This section describes the serial interface for the Union Pacific SmartScanNG² system. It covers how to enter or change the system parameters. It is necessary to go through a complete setup the first time a SmartScanNG² system is installed at a new site. (If this is a double-track site, you also need to do this for the other SmartScanNG² system.) After that, the processor (in the Controller module) retains the setup information in flash memory. During a power outage, no setup information is lost.

4.1 Main Menu

1 If **on-site**, plug your computer into COM1.

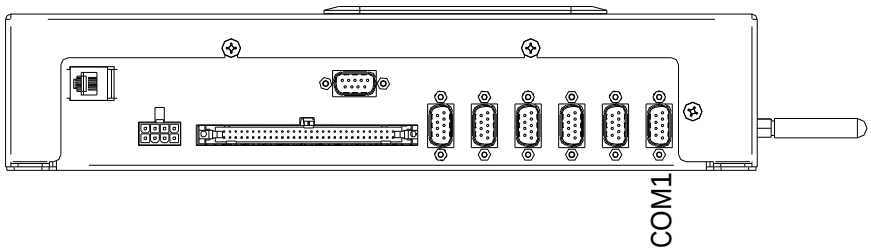

2 Turn on your computer.

3 Be sure that your computer has installed communications software, that it is set to use full duplex, and that the baud rate is set to the appropriate setting (factory default is 19,200).

Use your communications software to open a LOG file and capture the whole session to the file. When your session is complete, you may then view what you have done with an editor, print it with a printer, or store it for later retrieval.

4 On your computer, open a LOG file then initiate remote connection to the site.

To display the **Main Menu**:

5 Press **[Esc].**

If system has been setup with security passwords, this prompt appears.

```
Enter password:
```

6 Type the appropriate password to display Main Menu.

System login with an administrative password allows all access to system menus.

System login with user password allows access to report menus and system functions menu but restricts access to the setup menu and security menu.

7 The Main Menu

```
SmartSCAN NG2, MP/KP:1234.5, Track:Single
07/18/2017 09:54:51, 28.1V, 76°F
Main Menu - Comm
----------------------------------------
[A] - Train Summary
[B] - Train Detail
[C] - Exception Summary
[D] - Exception Detail
[E] - System Status Report
[F] - Last Train
[G] - Range of trains
[H] - Train DSRs
[I] - AEI Diagnostic
[J] - Setup
[K] - Event log
[L] - System Functions Menu
[M] - Replay train
[N] - Security Menu
[X] – Exit
```

By selecting an option at the above prompt, you can:

- Produce a report.
- Replay an EOT announcement.
- Access the Setup menu from which you can set system parameters.
- Access the System Functions menu from which you can perform a radio test, run a test train, start the scanner calibration process, review system maintenance information, etc.

If a train is at the site when the Main menu is generated, "*** Train Is Present ***" is displayed just above the menu header for the Main menu and for every other menu.

8 When done, close the LOG file.

9 To exit the serial interface and return the system to normal operation, type **X**

4.2 Setup Menu

To display the Setup menu:

1. Be sure that the Main menu is displayed.

   The Main menu looks like this.

```
SmartSCAN NG2, MP/KP:1234.5, Track:Single
07/18/2017 09:54:51, 28.1V, 76°F
Main Menu - Comm
----------------------------------------
[A] - Train Summary
[B] - Train Detail
[C] - Exception Summary
[D] - Exception Detail
[E] - System Status Report
[F] - Last Train
[G] - Range of trains
[H] - Train DSRs
[I] - AEI Diagnostic
[J] - Setup
[K] - Event log
[L] - System Functions Menu
[M] - Replay train
[N] - Security Menu
[X] - Exit
```

2. Select the **Setup** to view menu options.

   If the Setup menu is password protected, this prompt appears.

```
You are not logged in with admin privileges
Enter password:
```

   You are given one chance to type the correct password. If you don't type the correct password, the system returns to the Main menu.

   If the password is less than 20 characters long, press **[Enter]** after typing the last character. If the password is the full 20 characters in length, pressing **[Enter]** isn't necessary.

```
SmartSCAN NG2, MP/KP:1234.5, Track:Single
07/18/2017 09:58:40, 28.1V, 76˚F
Setup Menu
----------------------------------------
[A] - Date and Time
[B] - Site ID ................... NONAME
[C] - MP/KP
[D] - Track Designation ......... Single
[E] - Track Direction ............... N/S
[F] - Alarm Settings
[G] - Equipment Settings
[H] - Messages Settings
[I] - AEI Settings
[J] - Load Default Setup Parameters
[K] - COM Port Settings
[L] - Network Settings
[M] - Talker Mode .......... Talk Freely
[N] - Velocity .................. COM 3
[O] - Multitech ............... Disabled
[P] - Wind Settings
[X] - Exit
```

To access any of the Setup menu options, type the letter that corresponds to the desired menu option.

At any prompt, a timeout mechanism is in place to prevent the system from remaining in that state indefinitely. When a timeout occurs, the serial interface regresses to the Main Menu or disconnects if it is a remote connection. At the Main menu, the timeout is set for ten minutes for telnet connection and 20 minutes for serial connection.

If a train is at the site when the Setup menu is generated, "*** Train Is Present ***" is displayed just above the menu header for the Setup menu.

3 To return to the Main menu, type **X**

If you've made setup changes, when you exit the menu you will be prompted with:

"This will save the settings. Please type 'setup' to save settings. Type anything else to cancel."

Changes to the system parameters aren't reflected until after you have exited the Setup menu.

4.2.1 Date and Time

To set or change the date, the time, or both:

1 Be sure that the Setup menu is displayed.

The Setup menu looks like this.

```
SmartSCAN NG2, MP/KP:1234.5, Track:Single
07/18/2017 09:58:40, 28.1V, 76°F
Setup Menu
----------------------------------------
[A] - Date and Time
[B] - Site ID ................... NONAME
[C] - MP/KP
[D] - Track Designation ......... Single
                  .
                  .
                  .
```

2 Select the Date and Time submenu

A prompt like this appears.

```
Current Date: 07/18/2017
Enter New Date (mm/dd/yyyy):
```

Dates are in **mm/dd/yyyy** format, where **mm** is month, **dd** is day, and **yyyy** is year. Type the current date. You must include slashes. For days and months from 1 through 9 you must type leading zeros. Thus, for 18 July 2017, type **07/18/2017**.

If you want to keep the displayed date, press **[Enter]**. If you don't, type a new date.

3 Type a new date <u>or</u> press **[Enter]**.

A prompt like this appears.

```
Current time is: 22:47:34
Enter new time:
```

Time is in 24-hour **hh:mm:ss** format, where 8 a.m. is 08:00:00, noon is 12:00:00, 8 p.m. is 20:00:00, and midnight is 00:00:00. Thus, for 17 seconds past 3:42 p.m., type **15:42:17**. You must include colons. For hours, minutes, and seconds from 0 through 9, type leading zeros.

If you want to keep the displayed time, press **[Enter]**. If you don't, type a new time.

4 Type a new time <u>or</u> press **[Enter]**.

A prompt like this appears.

```
Current Time Zone: Eastern
Enter New Time Zone (E-Eastern,C-Central,M-Mountain,P-Pacific):
```

If you want to keep the displayed time zone, press **[Enter]**. If you don't, type the letter that corresponds to the time zone you want.

5 Type the letter that corresponds to the time zone you want <u>or</u> press **[Enter]**.

A prompt like this appears, stating whether the daylight-saving-time adjustment is currently disabled or enabled. Daylight-saving time is the period during which clocks are set one hour ahead of local standard time.

```
Daylight Savings Time Enabled OK (Y/N)?
```

If disabled, all times throughout the year are in standard time. If enabled, all times between the second Sunday in March and the first Sunday in November are in daylight-saving time. All other times are in standard time. Any change takes effect immediately. Later, if enabled, at 2:00 a.m. on the second Sunday in March the system will adjust the system's clock forward an hour to 3:00 a.m. and at 2:00 a.m. on the first Sunday in November the system will adjust the system's clock backward to 1:00 a.m.

At this point, you can type **Y** (yes), type **N** (no), or press **[Enter]**. Pressing **[Enter]** has the same effect as typing **Y**. Typing **N** doesn't change the displayed time.

6 If you want to modify the adjustment, type **N**

Typing the letter **N** toggles between disabled or enabled. A message like this appears, stating whether the daylight-saving-time adjustment is <u>now</u> disabled or enabled.

```
Daylight Savings Time Disabled OK (Y/N)?
```

7 If you don't want to modify the daylight-saving-time adjustment, type **Y**

The Setup menu reappears. Information like this appears on line two of the Setup menu, where EDT is the abbreviation for Eastern Daylight Time. If it were EST instead, it would be Eastern Standard Time.

```
07/18/2017 22:47 EDT
```

8 Upon completion of the step above, you will be prompted to type the word “setup” to save any changes made.

4.2.2 Site ID

To set or change the site ID setting:

1. Be sure that the Setup menu is displayed.

   The Setup menu looks like this.

```
SmartSCAN NG2, MP/KP:1234.5, Track:Single
07/18/2017 09:58:40, 28.1V, 76°F
Setup Menu
----------------------------------------
[A] - Date and Time
[B] - Site ID ................... NONAME
[C] - MP/KP
[D] - Track Designation ......... Single
                  .
                  .
                  .
```

2. Select the Site ID submenu.

   A prompt like this appears.

```
Enter the Site ID (limit 6 characters):
```

3. To keep the displayed site ID:

   a Press **[Enter]**.

   The Setup menu reappears.

   b Skip the remaining steps.

4. To change the displayed site ID, type the new six-character ID.

   The Setup menu reappears.

4.2.3 Milepost/Kilometer Post (MP/KP)

To set or change the milepost/kilometer post (MP/KP) setting:

1. Be sure that the Setup menu is displayed.

   The Setup menu looks like this.

```
SmartSCAN NG2, MP/KP:1234.5, Track:Single
07/18/2017 09:58:40, 28.1V, 76°F
Setup Menu
----------------------------------------
[A] - Date and Time
[B] - Site ID ................... NONAME
[C] - MP/KP
[D] - Track Designation ......... Single
                  .
                  .
                  .
```

2 Select the MP/KP submenu

A prompt like this appears.

```
Enter the milepost in the form ####.# (use leading zeros):
```

MP/KP is in **nnnn.n** format. If the desired MP/KP has less than five digits, type leading zeros. If the desired MP/KP is an integer, type a trailing zero. Thus, for MP/KP 30, type **0030.0**.

3 To keep the displayed MP/KP:

a Press **[Enter]**.

The Setup menu reappears.

b Skip the remaining steps.

4 To change the displayed MP/KP, type the new five-digit MP/KP including the decimal point.

The Setup menu reappears.

4.2.4 Track Designation

To set or change the track designation setting:

1 Be sure that the Setup menu is displayed.

The Setup menu looks like this.

```
SmartSCAN NG2, MP/KP:1234.5, Track:Single
07/18/2017 13:39:24, 28.1V, 84°F
Setup Menu
----------------------------------------
[A] - Date and Time
[B] - Site ID ................... NONAME
[C] - MP/KP
[D] - Track Designation ......... Single
[E] - Track Direction ............... N/S
                  .
                  .
                  .
```

2 Select the Track Designation option.

A menu and prompt like this appears.

```
Select a track designation:
[0] - Single
[1] - 1
[2] - 2
[3] - 3
[4] - 4
[5] - 5
[6] - 6
```

This menu option allows you to change the track designation by typing the letter corresponding to the desired setting.

4.2.5 Track Direction

To change the track direction setting:

1. Be sure that the Setup menu is displayed.

   The Setup menu looks like this.

```
SmartSCAN NG2, MP/KP:1234.5, Track:Single
07/18/2017 13:39:24, 28.1V, 84°F
Setup Menu
----------------------------------------
[A] - Date and Time
[B] - Site ID ................... NONAME
[C] - MP/KP
[D] - Track Designation ......... Single
[E] - Track Direction .............. N/S
                  .
                  .
                  .
```

2. Select the Track Direction option to toggle from N/S to E/W setting.

4.2.6 Alarm Settings

To set or change one or more of the alarm settings:

1. Be sure that the Setup menu is displayed.

   The Setup menu looks like this.

```
SmartSCAN NG2, MP/KP:1234.5, Track:Single
07/18/2017 13:39:24, 28.1V, 84°F
Setup Menu
----------------------------------------
[A] - Date and Time
[B] - Site ID ................... NONAME
[C] - MP/KP
[D] - Track Designation ......... Single
[E] - Track Direction .............. N/S
[F] - Alarm Settings
                  .
                  .
                  .
```

2 Select the Alarm Settings menu

A menu and prompt like this appears.

```
Alarm Settings
----------------------------------------
[A] - Absolute ..................... 200
[B] - Differential ................. 115
[C] - Hot Wheel .................... 698
[D] - Cold Journal Counter ........... 3
[E] - Cold Journal Temp ............ 10
[F] - Cold Res Counter ............... 3
[G] - Differential Enabled .......... No
[H] - Advanced
[X] - Exit
```

This menu option allows you to change the various alarm limits that affect system operations. The current setting for each limit is displayed. To change one of the alarm limit settings, start by typing the letter corresponding to the desired option.

3 To leave the Alarm Settings menu and return to the Setup menu:

a Press **[Esc]** or type **X**

The Setup menu reappears.

b Skip the remaining steps.

4 To change the displayed **Absolute-alarm limit**:

The number after the word Absolute (on the Alarm Settings menu) is an offset in degrees Fahrenheit above ambient temperature. When a bearing temperature exceeds this value, the system generates an Absolute alarm.

```
Alarm Settings
----------------------------------------
[A] - Absolute ..................... 200
[B] - Differential ................. 115
[C] - Hot Wheel .................... 698
                  .
                  .
                  .
```

a Select **Absolute** from the Alarm Settings menu.

This prompt appears.

```
Absolute alarm setting (default = 200)
Enter a value from 1 to 300:
```

If the new limit has less than three digits, type leading zeros to make it three digits long or press **[Enter]** after typing one or two digits.

b To not change the limit, press **[Esc]** and return to Alarm Settings Menu.

c Type the new limit.

5 To change the displayed **Differential-alarm limit**:

The number after the word Differential (on the Alarm Settings menu) is an offset in degrees Fahrenheit between rail1 and rail2. A bearing temperature is compared to the bearing temperature on the opposite end of the same axle. When the difference in temperatures exceeds the value on the screen, the system generates a Differential alarm.

```
Alarm Settings
----------------------------------------
[A] - Absolute ...................... 200
[B] - Differential ................. 115
[C] - Hot Wheel ..................... 698
                  .
                  .
                  .
```

a Select **Differential** from the Alarm Settings menu.

This prompt appears.

```
Differential alarm setting (default = 115)
Enter a value between 0 and 300:
```

If the new limit has less than three digits, type leading zeros to make it three digits long or press **[Enter]** after typing one or two digits.

b To not change the limit, press **[Esc]** and return to Alarm Settings menu.

c Type the new limit.

6 To change the displayed **Hot Wheel-alarm limit**:

The number after the words Hot Wheel (on the Alarm Settings menu) is an offset in degrees Fahrenheit above ambient temperature. When a wheel temperature exceeds this value, the system generates a Hotwheel alarm. However, when the Hotwheel option on the Equipment Settings menu is disabled, Hotwheel alarms aren't generated.

```
Alarm Settings
----------------------------------------
[A] - Absolute ...................... 200
[B] - Differential ................. 115
[C] - Hot Wheel ..................... 698
                  .
                  .
                  .
```

a Select **Hot Wheel** from the Alarm Settings menu.

This prompt appears.

```
Hot Wheel alarm setting (default = 698)
Enter a value between 0 and 900:
```

If the new limit has less than three digits, type leading zeros to make it three digits long or press **[Enter]** after typing one or two digits.

b To not change the limit, press **[Esc]** and return to Alarm Settings menu.

c Type the new limit.

7 To change the setting for **Cold Journal Counter**:

The number after the words Cold Journal Counter (on the Alarm Settings menu) is the maximum number (per railside) of consecutive trains having:

- Cold Rail alarms needed to generate a Successive Cold Rails Exceeded alarm.
- Equal Heats Test Failed alarms needed to generate a Max Equal Heat Test Failures Exceeded alarm.

```
                    .
                    .
                    .
  [D] - Cold Journal Counter ........... 3
  [E] - Cold Journal Temp ............. 10
  [F] - Cold Res Counter ............... 3
  [G] - Differential Enabled .......... No
  [H] - Advanced
  [X] - Exit
```

a Select **Cold Journal Counter** from the Alarm Settings menu.

This prompt appears.

```
  Cold Journal Counter alarm setting (default = 3)
  Enter a value from 1 to 9:
```

b To not change the value, press **[Esc]** and return to Alarm Settings menu.

c Type the new value.

8 To change the displayed **Cold Journal Temperature**:

The number after the words Cold Journal Temp (on the Alarm Settings menu) is an offset, in degrees Fahrenheit, above the ambient temperature. When no bearing on a given rail generates a delta temperature reading greater than or equal to this value, the system generates a Cold Rail alarm for the given rail. There is a different Cold Rail alarm for each rail. That is, there is a Cold North Rail alarm and a Cold South Rail alarm (or, depending on track direction, a Cold East Rail alarm and a Cold West Rail alarm).

```
                    .
                    .
                    .
  [D] - Cold Journal Counter ........... 3
  [E] - Cold Journal Temp ............. 10
  [F] - Cold Res Counter ............... 3
  [G] - Differential Enabled .......... No
  [H] - Advanced
  [X] - Exit
```

a Select **Cold Journal Temp** from the Alarm Settings menu.

This prompt appears.

```
Cold Journal Temp alarm setting (default = 10)
Enter a value from 1 to 30:
```

If the new value has less than two digits, type leading zero or press **[Enter]** after typing one digit.

b To not change the value, press **[Esc]** and return to Alarm Settings.

c Type the new value.

9 To change the displayed **Cold Resistor Counter**:

The number after the words Cold Res Counter is the maximum number (per railside) of consecutive trains, having Cold Resistor alarms, allowed before generating a Successive Cold Resistors Exceeded alarm. Under normal circumstances, cold resistor conditions represent System Alarms, not Integrity Failures. However, if the number of consecutive trains bearing identical Cold Resistor alarms equals or exceeds the Cold Resistor Counter option on the Alarm Settings menu, this condition becomes an Integrity Failure. If the number of consecutive trains bearing identical Cold Resistor alarms equals or exceeds the cold-resistor limit, the System Alarms section of the Train Detail and Exception Detail reports displays the message "Successive Cold Resistors Exceeded."

```
                    .
                    .
                    .
[F] - Cold Res Counter ............... 3
[G] - Differential Enabled .......... No
[H] - Advanced
[X] - Exit
```

a Select **Cold Res Counter**

This prompt appears.

```
Cold Res Counter alarm setting (default = 3)
Enter a value from 1 to 9:
```

b To not change the value, press **[Esc]** and return to Alarm Settings.

c Type the new value.

10 To change the **Differential Enabled** setting:

This setting enables or disables Differential alarms which are generated when a bearing temperature exceeds the opposite side bearing temperature of the same axle by a differential amount established using the Differential option on the Alarm Limits submenu.

Select Differential Enabled setting to toggle from Yes to No.

```
                    .
                    .
                    .
[F] - Cold Res Counter ............... 3
[G] - Differential Enabled .......... Yes
[H] - Advanced
[X] - Exit
```

11 To <u>change</u> **Advanced** alarm setting options:

Select desired setting. After the prompt, enter new value.

```
Alarm Settings (Advanced)
----------------------------------------
[A] - Carside Slope ............... 1.31
[B] - Carside Minimum ............... 155
[C] - Res Test: Minimum Rail Avg .... 25
[D] - Res Test: Minimum Wheel Avg ... 28
[E] - Bearing DSR Capture Temp ....... 5
[F] - Wheel DSR Capture Temp ......... 5
[G] - Max Alarms ..................... 6
[X] - Exit
```

12 **Carside Slope:** The number after the words Carside Slope (on the Alarm Settings menu) is the slope value used when doing carside-slope calculation/analysis. Section 2.0 - Defect Detection describes the Carside Slope alarm process. In order for Carside Slope alarms to be processed, they must be enabled using the Carside Slope option on the Equipment Settings menu.

Select **Carside Slope** option to <u>change</u> the setting:

A prompt this appears.

```
Carside Slope alarm setting (default = 1.31)
Enter a value from 0.01 to 2.55:
```

Type the new value or hit escape to return to previous menu.

13 **Carside Minimum**: The number after the words Carside Minimum (on the Alarm Settings menu) is a minimum offset (in degrees Fahrenheit) used when doing carside-slope calculation/analysis. If the Carside Slope option on the Equipment Settings menu is disabled during train passage, no carside-slope calculation/analysis is done and, thus, no Carside Slope alarms are generated. If the Carside Slope option on the Equipment Settings menu is disabled at the time a Train Detail report is requested, no carside-slope calculation is done and, thus, no carside-slope alarm-limit lines are generated. **Section 2.0 - Defect Detection** describes the Carside Slope alarm process.

Select **Carside Minimum** option to change the setting:

A prompt this appears.

```
Carside Minimum alarm setting (default = 155)
Enter a value from 0 to 300:
```

Type the new value or hit escape to return to previous menu.

14 **Res Test: Minimum Rail Avg:** The number after the words Res Test: Minimum Rail Avg is the value that the average heats for both bearings are tested against after a train leaves the site. During the post-train resistor test, if a read resistor value isn't greater than 76% of the required resistor value, two additional checks will be performed. The average heats for both bearings are tested against the value set by the Resistor Test Minimum Rail Average option. If the average heats are less than the value set by the Resistor Test Minimum Rail Average option, the system generates a Cold Resistor alarm. If the average heats are greater than or equal to this value, bearing temperatures are compared on an axle-by-axle basis. This second check determines if more than half of the temperatures read by the bearing scanner with the low-read resistor value are 70% or less than the temperatures read by the other bearing scanner on the same axle. If 50% or more of the axles are low, a Cold Resistor alarm is flagged. If not, a Cold Resistor alarm isn't flagged, but a Rail Resistor Test Overridden alarm is.

Select **Res Test: Minimum Rail Avg** option to change the setting:
A prompt this appears.

```
Res Test: Minimum Rail Avg alarm setting (default = 25)
Enter a value from 0 to 300:
```

Type the new value or hit escape to return to previous menu.

15 **Res Test: Minimum Wheel Avg:** The number after the words Res Test: Minimum Wheel Avg is the value that the average heats for both wheels are tested against after a train leaves the site. During the post-train resistor test, if a read resistor value isn't greater than 76% of the required resistor value, two additional checks will be performed. The average heats for both wheels are tested against the value set by the Resistor Test Minimum Wheel Average option. If the average heats are less than the value set by the Resistor Test Minimum Wheel Average option, the system generates a Cold Wheel Scanner Resistor alarm. If the average heats are greater than or equal to this value, wheel temperatures are compared on an axle-by-axle basis. This second check determines if more than half of the temperatures read by the wheel scanner with the low-read resistor value are 70% or less than the temperatures read by the other wheel scanner on the same axle. If 50% or more of the axles are different, a Cold Wheel Scanner Resistor alarm is flagged. If not, a Cold Wheel Scanner Resistor alarm isn't flagged, but a Wheel Resistor Test Overridden alarm is.

Select **Res Test: Minimum Wheel Avg** option to change the setting:

A prompt this appears.

```
Res Test: Minimum Wheel Avg alarm setting (default = 28)
Enter a value from 0 to 900:
```

Type the new value or hit escape to return to previous menu.

16 **Bearing DSR Capture Temp**: The temperature samples collected by the system (as a bearing passes through the field of view of a scanner) are retained for those bearings that exceed the warm-bearing trigger. When the bearing temperature exceeds this value, it becomes part of a Dynamic Scan Rate (DSR) record. (Only 16 bearing-related DSR records are kept per train.) No alarm announcement is generated by the detection of a warm bearing.

Select **Bearing DSR Capture Temp** option to <u>change</u> the setting:

A prompt this appears.

```
Bearing DSR Capture Temp alarm setting (default = 72)
Enter a value from 0 to 300:
```

Type the new value or hit escape to return to previous menu.

17 **Wheel DSR Capture Temp**: The temperature samples collected by the system (as a wheel passes through the field of view of a scanner) are retained for those wheels that exceed the warm-wheel trigger. When the wheel temperature exceeds this value, it becomes part of a Dynamic Scan Rate (DSR) record. (Only 16 wheel-related DSR records are kept per train.) No alarm announcement is generated by the detection of a warm wheel.")

Select **Wheel DSR Capture Temp** option to change the setting:
A prompt this appears.

```
Wheel DSR Capture Temp alarm setting (default = 361)
Enter a value from 0 to 900:
```

Type the new value or hit escape to return to previous menu.

18 **Max Alarms**: (The maximum number of Exception Alarms allowed on a train before generating an Integrity Failure alarm. The Maximum Exception Alarms Exceeded alarm is generated when the maximum number of Exception Alarms (defined by the Max Alarms option) is exceeded on a single train. This limit also controls assignment of the Stuck Dragger alarm. The Stuck Dragger alarm is generated when the maximum number of consecutive axles (defined by the Max Alarms option) had Dragging-Equipment alarms during train passage.)

Select Max Alarms option to change the setting:

A prompt this appears.

```
Max Alarms alarm setting (default = 6)
Enter a value from 1 to 11:
```

Type the new value or hit escape to return to previous menu.

4.2.7 Equipment Settings

To set or change one or more of the equipment parameters:

1 Be sure that the Setup menu is displayed.

The Setup menu looks like this.

```
SmartSCAN NG2, MP/KP:1234.5, Track:Single
07/18/2017 14:42:29, 28.2V, 86°F
Setup Menu
----------------------------------------
[A] - Date and Time
[B] - Site ID ................... NONAME
[C] - MP/KP
[D] - Track Designation ......... Single
[E] - Track Direction ............. N/S
[F] - Alarm Settings
[G] - Equipment Settings
                  .
                  .
                  .
```

2 Select the Equipment Settings menu.

A menu and prompt like this appears.

```
Equipment Settings
----------------------------------------
[A] - Dragger ....................... Yes
[B] - High Load ..................... Yes
[C] - Wide Load ..................... Yes
[D] - Hot Wheel ..................... Yes
[E] - AEI ........................... No
[F] - Hot Bearing ................... Yes
[G] - Presence Hardware ............ Yes
[H] - Advance Transducers ........... No
[I] - Cold Rail Test ........ All trains
[J] - AC Power Off Monitor ......... Yes
[K] - Select scanner types
[L] - Advanced
[X] - Exit
```

The current setting for each menu option is displayed. For example, the screen above shows that Wide-Load alarm detection is inactive (NO). To change one of the settings, press the letter corresponding to the desired option. Except for the Scanner Type and Advanced options, all the options toggle between two or three settings.

3 To leave the Equipment Settings menu and return to the Setup menu:

a Press **[Esc]** <u>or</u> type **X**

The Setup menu reappears.

b Skip the remaining steps.

4 To <u>change</u> the current **dragger** (dragging-equipment) setting:

The Equipment Settings menu shows whether Dragging-Equipment alarm detection is enabled (YES) or disabled (NO). When disabled, Dragging-Equipment alarms won't be recorded. When enabled, Dragging-Equipment alarms will be announced and stored. Since they are stored, they can be printed. In the presence of a continuous Dragger signal, the system alarms consecutive axles. When the number of consecutive axles with Dragger alarms reaches the Max Alarms limit, the system flags the Stuck Dragger condition.

```
Equipment Settings
----------------------------------------
[A] - Dragger ....................... NO
[B] - High Load ..................... NO
[C] - Wide Load ..................... NO
                    .
                    .
                    .
```

a Select **Dragger** from the Equipment Settings menu.

The dragging-equipment setting toggles between active (YES) and inactive (NO). The Dragger option on the Equipment Settings menu changes. The Equipment Settings menu reappears.

If you want Dragging-Equipment alarm detection to occur, be sure that YES appears after the word Dragger on the Equipment Settings menu.

b Return to Equipment Settings.

5 To <u>change</u> the current **High Load** setting:

The Equipment Settings menu shows whether High Load alarm detection is active (YES) or inactive (NO). When High-Load detection is active, if the Clearance Mode setting on the Equipment/Advanced menu is set to Multiplexed, the system will record and announce High-Wide alarms. When the Clearance Mode setting is set to Separate, the system will record and announce High Load alarms.

```
Equipment Settings
----------------------------------------
[A] - Dragger ....................... NO
[B] - High Load ..................... NO
[C] - Wide Load ..................... NO
                    .
                    .
                    .
```

a Select **High Load** from the Equipment Settings menu.

The high-load setting toggles between active (YES) and inactive (NO). The High-Load option on the Equipment Settings menu changes. The Equipment Settings menu reappears.

If you want High-Load alarm detection to occur, be sure that YES appears after the word High-Load on the Equipment Settings menu.

b Return to Equipment Settings.

6 To change the current **Wide Load** setting:

The Equipment Settings menu shows whether Wide-Load alarm detection is active (YES) or inactive (NO).

a Select **Wide Load** from the Equipment Settings menu.

The wide-load setting toggles between active (YES) and inactive (NO). The Wide-Load option on the Equipment Settings menu changes. The Equipment Settings menu reappears.

If you want Wide-Load alarm detection to occur, be sure that YES appears after the word Wide-Load on the Equipment Settings menu.

b Return to Equipment Settings.

7 To change the current **Hot Wheel** setting:

The Equipment Settings menu shows whether Hotwheel alarm detection is enabled (YES) or disabled (NO). When disabled, Hotwheel alarms won't be announced nor stored. Since they aren't stored, they can't be printed. When enabled, Hotwheel alarms will be announced and stored. Since they are stored, they can be printed.

a Select **Hot Wheel** from the Equipment Settings menu.

The hotwheel setting toggles between active (YES) and inactive (NO). The Hotwheel option on the Equipment Settings menu changes. The Equipment Settings menu reappears.

b Return to Equipment Settings.

8 To change the **AEI** setting:

The Equipment Menu shows whether the AEI option is enabled (YES) or disabled (NO). When an AEI tag reader module and antennas are installed in conjunction with the NG², when the AEI option is enabled, the NG² will acquire the AEI identifiers from the vehicles in a passing train. These AEI identifiers will then be included in Train Detail reports and can be included in broadcast alarm messages. When the AEI option on the Equipment menu is disabled, the NG²'s interface to a tag reader will not be monitored.

a Select **AEI** from the Equipment Settings menu.

The setting toggles between active (YES) and (NO). The Equipment Settings menu reappears.

b Return to Equipment Settings.

9 To change the **Hot Bearing** setting:

The Equipment Settings menu shows whether the Hot Bearing alarm detection is enabled (YES) or disabled (NO). Hot Bearing alarms include Absolute, Differential, Carside Slope, and Pyro Saturation alarms. When disabled, Hot Bearing alarms won't be announced nor stored. Since they aren't stored, they can't be printed. When enabled, Hot Bearing alarms will be announced and stored.

a Select **Hot Bearing** from the Equipment Settings menu.

The hot bearing setting toggles between active (YES) and inactive (NO). The Equipment Settings menu reappears.

b Return to Equipment Settings.

10 To change the **Presence Hardware** setting:
The Equipment Menu shows whether the Presence Hardware option is enabled (YES) or disabled (NO). When the Presence Hardware option is disabled, the NG² will ignore the Presence input to the system. When the Presence Hardware option is enabled, the NG² will monitor the system's presence input for indication of train presence.

a Select **Presence Hardware** from the Equipment Settings menu.

The Presence Hardware setting toggles between active (Yes) and inactive (No). The Equipment Settings menu reappears.

b Return to Equipment Settings.

11 To change the **Advance Transducer** setting:

a Select **Advance Transducer** from the Equipment Settings menu.

The Advance Transducer setting toggles between active (YES) and inactive (NO). The Equipment Settings menu reappears.

b Return to Equipment Settings.

12 To change the **Cold Rail Test** setting:

The Equipment Menu shows whether the detector performs post-train cold-rail and equal-heat tests for all trains (All Trains) or only trains having at least 50 axles (Long Trains Only).

a Select **Cold Rail Test** from the Equipment Settings menu.

The setting toggles between **All Trains** and **Long Trains Only**. The Equipment Settings menu reappears.

b Return to Equipment Settings.

13 To change the **AC Power Off Monitor** setting:

a Select **AC Power Off Monitor** from the Equipment Settings menu.

The AC Power Off Monitor setting toggles between active (YES) and inactive (NO). The Equipment Settings menu reappears.

b Return to Equipment Settings.

14 To **Select Scanner Types**:

a Select Scanner Types option from the Equipment Settings menu.

```
Scanner Types (changes require calibration)
-------------------------------------------
[A] - North Rail: Type III
[B] - South Rail: Type III
[C] - North Wheel: Type III
[D] - South Wheel: Type III
[X] - Exit
```

Select scanner options to toggle between **Type III** and **Type II**.

Type X to return to Equipment Settings menu.

b Return to Equipment Settings.

15 To <u>change</u> **Advanced** settings:

a Select **Advanced** from the Equipment Settings menu.

```
Equipment Settings (Advanced)
-----------------------------------------
[A] - Carside Slope ................. No
[B] - Clearance Type ......... Trip Wire
[C] - Clearance Mode .......... Separate
[D] - Winter Cycle ........... Oct - Mar
[E] - Transducer Gain ........... Normal
[F] - Resistor Test ............ Enabled
[G] - Gate Distance ............ 24.0 in
[H] - Dragger Debounce Time ....... 0 ms
[I] - Pre Train Dragger Dist ...... 0 ft
[J] - Pre Train High/Wide Dist .... 0 ft
[K] - Presence Timeout Period ... 10 sec
[L] - System Voltage ............... 24v
[X] - Exit
```

16 To <u>change</u> the current **carside-slope** setting:

The Equipment Settings (Advanced) menu shows whether Carside Slope alarm detection is enabled (YES) or disabled (NO). If disabled (NO) during train passage, no carside-slope calculation/analysis is done and, thus, no Carside Slope alarms are generated. If disabled (NO) at the time a Train Detail report is requested, no carside-slope calculation is done and, thus, no carside-slope alarm-limit lines are generated on the report.

a Select **Carside Slope** from the Equipment Settings (Advanced) menu.

The carside-slope setting toggles between active (YES) and inactive (NO). The Carside Slope option changes. The Equipment Settings (Advanced) menu reappears.

b Return to Equipment Settings (Advanced).

17 To change the current **clearance-type** setting:

The Equipment Settings (Advanced) menu shows whether clearance type is trip wire or light beam. This option is only used for high-load detectors and wide-load detectors. Both high-load detectors and wide-load detectors must be either trip-wire detectors or light-beam detectors.

a Select **Clearance Type** from the Equipment Settings menu.

The clearance-type setting toggles between trip wire and light beam. The Clearance Type option on the Equipment Settings menu changes. The Equipment Settings (Advanced) menu reappears.

b Return to Equipment Settings (Advanced).

18 To change the current **clearance-mode** setting:

The Equipment Settings (Advanced) menu shows whether clearance mode is separate or multiplexed. This option is only used for high-load detectors and wide-load detectors. When set to separate, the alarms coming from the high-load detectors are announced as High-Load alarms and the alarms coming from the wide-load detectors are announced as Wide-Load alarms. When set to multiplexed, the alarms coming from the high-load detectors and wide-load detectors are announced as High-Wide alarms.

a Select **Clearance Mode** from the Equipment Settings (Advanced) menu.

The clearance-mode setting toggles between separate and multiplexed. The Clearance Mode option on the Equipment Settings menu changes. The Equipment Settings menu reappears.

b Return to Equipment Settings (Advanced).

19 To change the current **winter-cycle** setting:

The Equipment Settings (Advanced) menu shows whether the winter-cycle feature is enabled (YES) or disabled (NO). To avoid errant heat readings caused by moisture on the pyrometer lenses, the scanners have heaters built into them. The heaters are made active, for varying periods of time, depending on an ambient temperature of 80°F (26.7°C) or less.

The table below lists the heater activation times for both normal and winter-cycle operation, grouped by ambient temperature.

Temperature Range in degrees Fahrenheit		**Out of every ten seconds, the number of seconds the scanner heaters are active**	
Low	**High**	**Winter Cycle Disabled**	**Winter Cycle Enabled**
--	16	4	8
17	35	3	7
36	51	2	2
52	80	1	1
80	--	Off	Off

The normal heater activation times aren't suitable for extremely cold climates, so the winter-cycle feature compensates for this. When this feature is disabled, the heater controls function normally. When enabled, the system increases the normal running time for the scanner heaters. The winter-cycle feature doesn't affect all the temperature ranges that the scanner heaters will activate on. It affects just the ones that are considered extremely cold.

a From the Equipment Settings (Advanced) submenu, select **Snow Cycle**.

The snow-cycle setting toggles between enabled (YES) and disabled (NO). The **Snow Cycle option** on the submenu changes.

If you disabled the snow-cycle setting, the Equipment Settings (Advanced) submenu reappears. If you enabled the snow-cycle setting, this prompt appears.

```
Enter Start Month (1-12)
```

If the new start value is one digit long, you can type a leading zero to make it two digits long or you can press **[Enter]** after typing one digit.

b If you disabled the snow-cycle setting, skip the steps below and return to step **3**.

c To not change the starting and ending values, press **[Esc]** and return to step **3**.

d Type the new starting value.

If you type zero or a value greater than 12, this error message and prompt appears.

```
Minimum valid value is 1, Maximum valid value is 12
Enter Start Month (1-12)
```

If you type an acceptable value, this prompt appears.

```
Enter End Month (1-12)
```

e If you get an error message, return to step **c**.

f To not change the ending value, press **[Esc]** and return to step **3**.

g Type the new ending value.

If you type zero or a value greater than 12, this error message and prompt appears.

```
Minimum valid value is 1, Maximum valid value is 12
Enter End Month (1-12)
```

If you type an acceptable value, the Equipment submenu reappears, displaying the start and end months that the snow cycle is enabled. For example, if you typed 11 for the start month and 01 for the end month, you'll see a line like this.

```
            .
            .
            .
G) Snow Cycle...... (Nov - Jan) YES
            .
            .
            .
```

If you entered the same value (that is, the same month) for both start and end months, the heaters are enabled year round. For example, if the start month is 12 and the end month is 12, the heaters are enabled year round. If the start month is 12 and the end month is 11, the heaters are also enabled year round. If the start month is 11 and the end month is 12, the heaters are only enabled for November and December.

h If you get an error message, return to step **f**.

i Return to Equipment Settings (Advanced).

20 To change the current **transducer-gain** setting:

The Equipment Settings (Advanced) menu shows whether the transducer-gain setting is normal or high. Regardless of the setting, the SmartScanNG² system starts every train with the transducer input comparator set to high mode. Then, if the train is traveling 20 mph (32 kph) or more and if the transducer gain was set to normal mode, the transducer input comparator switches to normal mode. This means that it is rarely necessary to set this option to high.

When the comparator is in high mode, the comparator converts lower voltage pulses from the transducer into output pulses. This causes the system to be more sensitive to transducer output. When the comparator is in normal mode, the comparator has a better chance of filtering transducer pulses not caused by a wheel.

a Select **Transducer Gain** from the Equipment Settings (Advanced) menu.

The transducer-gain setting toggles between **normal** and **high**. The Transducer Gain option on the Equipment Settings menu changes. The Equipment Settings menu reappears.

b Return to Equipment Settings (Advanced).

21 To change the current **resistor-test** setting:

The Equipment Settings (Advanced) menu shows whether the resistor-test setting is enabled or disabled.

After a train clears a site, the system does an integrity test (when enabled) to verify that the scanners are operational and that the system can read alarm level heat. This test consists of reading the temperature of power resistors, mounted to the back of the scanner shutters, after the shutters close. The recorded temperature of the shutter resistors is compared against expected values, which are calculated using a combination of the amount of time the shutters were open and the system battery voltage.

When the resistor integrity test is enabled, a system algorithm determines the minimum acceptable resistor temperature values for a given train. When disabled, the resistor integrity test is not performed.

The minimum required resistor temperatures for a given train are determined by the train's duration at the site and the resistor temperature baseline profile. This profile was established 20 minutes after the user calibrates the scanners with the autocalibration function. Twenty minutes is the cooling period required to allow the resistors to return to ambient temperature after autocalibration.

```
                    .
                    .
                    .
[F] - Transducer Gain ........... Normal
[G] - Resistor Test ............ Enabled
[H] - Gate Distance ............ 24.0 in
                    .
                    .
                    .
```

a Select **Resistor Test** from the Equipment Settings (Advanced) menu.

The resistor-test setting toggles from enabled to disabled.

b Return to Equipment Settings (Advanced).

22 To <u>change</u> the current value for **gate distance** (aka gate width):

The Equipment Settings (Advanced) menu shows the number of inches between the centers of the gating transducers.

```
                    .
                    .
                    .
[F] - Transducer Gain ........... Normal
[G] - Resistor Test ............ Enabled
[H] - Gate Distance ............ 24.0 in
                    .
                    .
                    .
```

a Select **Gate Distance** from the Equipment Settings (Advanced) menu.

This prompt appears.

```
Gate Distance equipment setting (default = 0.0)

Enter a value between 0.0 and 48.0:
```

The gate distance is in **nn.n** format. If the new value has less than three digits, type leading zeros, trailing zeros, or both. Thus, for 2, type **02.0**. The gate distance (it is usually 24.0) can be recorded in 1/10-inch increments to reflect the actual transducer spacing. Accurate gating-transducer spacing results in accurate speed calculations and train length calculations.

b Type the number in the **nn.n** format.

The Gate Distance option on the Equipment Settings (Advanced) menu changes. The Equipment Settings menu reappears.

c Return to Equipment Settings (Advanced).

23 The **Dragger Debounce Time** parameter defines the amount of time the Dragger signal must be active before the system flags a Dragger alarm. The detector ignores Dragger activations with durations shorter than this time limit. To change this parameter:

a Select **Dragger Debounce Time** from the Equipment Settings (Advanced) menu.

This prompt appears.

```
Dragger Debounce Time equipment setting (default = 100 ms)
Enter a value between 0 and 999:
```

If the new value has less than three digits, type leading zeros to make it three digits long or press [Enter] after typing one or two digits.

b Return to Equipment Settings (Advanced).

24 The **Pre Train Dragger** distance defines the amount of space in front of a train in which a detected dragger alarm is assigned to the first axle rather than as a pre-train alarm. To change the Pre Train Dragger Distance:

a Select **Pre Train Dragger Dist** from the Equipment Settings (Advanced) menu.

This prompt appears.

```
Pre Train Dragger Dist equipment setting (default = 0 ft)
Enter a value between 0 and 999:
```

If the new value has less than three digits, type leading zeros to make it three digits long or press [Enter] after typing one or two digits.

b Return to Equipment Settings (Advanced).

25 The **Pre Train High/Wide** distance defines the amount of space in front of a train in which a detected high-load alarm or wide-load alarm is assigned to the first axle rather than as a pre-train alarm. To change the Pre Train High/Wide Distance:

a Select **Pre Train High/Wide Dist** from the Equipment Settings (Advanced) menu.

This prompt appears.

```
Pre Train High/Wide Dist equipment setting (default = 0 ft)
Enter a value between 0 and 999:
```

If the new value has less than three digits, type leading zeros to make it three digits long or press [Enter] after typing one or two digits.

b Return to Equipment Settings (Advanced).

26 Presence Timeout Period defines the period of time that Presence must be inactive before a train is finalized and stored. To change the Presence Timeout Period:

a Select **Presence Timeout Period** from the Equipment Settings (Advanced) menu.

This prompt appears.

```
Presence Timeout Period equipment setting (default = 10 sec)
Enter a value from 5 to 30:
```

b Return to Equipment Settings (Advanced).

27 The **System Voltage** parameter should be set to match the voltage of the battery subsystem currently powering your SmartScanNG² (either 24V or 12V). This setting determines the battery levels used to flag Low Battery and Dead Battery conditions. To change this setting:

a Select System Voltage setting to toggle from 24V to 12V settings.

b Return to Equipment Settings (Advanced).

4.2.8 Messages

To set or change any of the message parameters:

1 Be sure that the Setup menu is displayed.

The Setup menu looks like this.

```
SmartSCAN NG2, MP/KP:1234.5, Track:Single
07/19/2017 11:21:02, 28.2V, 84˚F
Setup Menu
----------------------------------------
                •
                •
                •
[G] - Equipment Settings
[H] - Messages Settings
[I] - AEI Settings
[J] - Load Default Setup Parameters
[K] - COM Port Settings
[L] - Network Settings
[M] - Talker Mode .......... Talk Freely
[N] - Velocity ................... COM 3
[O] - Multitech ............... Disabled
[P] - Wind Settings
[X] - Exit
```

2 Select the Messages menu

A menu and prompt like this appears. The options on the Messages menu are used to affect the phrases broadcast to a passing train or are used to modify the parameters associated with the rebroadcast function.

```
Messages Settings
----------------------------------------
[A] - Axles ......................... No
[B] - Speed ......................... No
[C] - Temperature ................... No
[D] - Length ........................ No
[E] - Slow ......................... Yes
[F] - Power Off .................... Yes
[G] - Customer Name ............... Yes
[H] - Lft/Rt Alarm Ref ............. No
[I] - Car ID With Alarm ............ No
[J] - Advanced
[X] - Exit
```

Enabling one or more of the above highlighted options generates the ancillary messages: A (axles), B (speed), C (temperature), D (length), E (slow), and F (power off). The other options of the Messages menu aren't used to generate ancillary messages.

3 Press **[Esc]** or type **X** to leave the Messages menu and return to the Setup menu:

4 To change the **announce-axles** setting:

The Messages menu shows whether the total axle count is to be part of (YES) or not part of (NO) post-train announcements.

a Select **Axles** from the Messages menu.

The announce-axles setting toggles between announce (YES) or not announce (NO). The Announce Axles option on the Messages menu changes. The Messages menu reappears.

b Return to Messages Settings.

5 To change the **announce-speed** setting:

The Messages menu shows whether the exit speed of the train is to be part of (YES) or not part of (NO) post-train announcements.

a Select **Speed** from the Messages menu.

The announce-speed setting toggles between announce (YES) or not announce (NO). The Announce Speed option on the Messages menu changes. The Messages menu reappears.

b Return to Messages Settings.

6 To change the **announce-temperature** setting:

The Messages menu shows whether the ambient temperature (taken at the site by the shielded temperature probe as the train leaves the site) is to be part of (YES) or not part of (NO) post-train announcements.

a Select **Temperature** from the Messages menu.

The announce-temperature setting toggles between announce (YES) or not announce (NO). The Announce Temperature option on the Messages menu changes. The Messages menu reappears.

b Return to Messages Settings.

7 To change the **announce-train-length** setting:

The Messages menu shows whether the train length is to be part of (YES) or not part of (NO) post-train announcements.

a Select **Length** from the Messages menu.

The announce-train-length setting toggles between announce (YES) or not announce (NO). The Announce Train Length option on the Messages menu changes. The Messages menu reappears.

b Return to Messages Settings.

8 To change the **announce-slow-train** setting:

The Messages menu shows whether a message indicating a slow train (one going 7 mph or slower) is to be part of (YES) or not part of (NO) post-train announcements.

a Select **Slow** from the Messages menu.

The announce-slow-train setting toggles between announce (YES) or not announce (NO). The Announce Slow Train option on the Messages menu changes. The Messages menu reappears.

b Return to Messages Settings.

9 To change the **announce-power-off** setting:

The Messages menu shows whether the power-off message is to be part of (YES) or not part of (NO) post-train announcements. The generation of this message depends on battery voltage, not AC power. It is generated whenever the voltage coming from the battery is less than 12.6 VDC (12V system) or 22.0 VDC (24V system). AC power need never have been off to cause this to happen. However, most times it does indicate that AC power has been off, causing the battery to be drained.

a Select **Power Off** from the Messages menu.

The announce-power-off setting toggles between announce (YES) or not announce (NO). The Announce Power Off option on the Messages menu changes. The Messages menu reappears.

b Return to Messages Settings.

10 To change the **announce-customer-name** setting:

The Messages menu shows whether the customer's railroad name is to be part of (YES) or not part of (NO) of all announcements.

a Select **Customer Name** from the Messages menu.

The announce-customer-name setting toggles between announce (YES) or not announce (NO). The Announce Customer Name option on the Messages menu changes. The Messages menu reappears.

b Return to Messages Settings.

11 To change the **left-right-alarm-reference** setting:

The Messages menu shows whether the alarm reference is announced as left or right (YES) or as north, south, east, or west (NO).

a Select **Lft/Rt Alarm Ref** from the Messages menu.

The left-right-alarm-reference setting toggles between YES and NO. The Announce Left-Right Alarm Reference option on the Messages menu changes. The Messages menu reappears.

b Return to Messages Settings.

12 To change the **announce-car-identification** setting:

The Messages menu shows whether car-identification information is to be announced (YES) or not announced (NO). When this option is set to YES and an Exception Alarm is found on a car, the car-identification information is included in the post-train announcement for the train having the Exception Alarm. This, of course, will only happen if the AEI option on the Equipment Settings menu is enabled (YES) and the AEI subsystem is functioning properly during train passage.

a Select **Car ID With Alarm** from the Messages menu.

The announce-car-identification setting toggles between enabled (YES) and disabled (NO). The Announce Car Identification option on the Messages menu changes. The Messages menu reappears.

b Return to Messages Settings.

13 Select **Advanced** to view or modify advanced message settings.

```
SmartSCAN NG2, MP/KP:0060.0, Track:Single
08/18/2017 15:13:44, 28.1V, 50°F
Messages Settings (Advanced)
----------------------------------------
[A] - Announce Hot Wheels .......... Yes
[B] - Announce High/Wide ........... Yes
[C] - Rebroadcast Time Limit .... 10 min
[D] - Rebroadcast DTMF Code ........ 001
[E] - Num Repeat No Defects ......... 1
[F] - EOT Repeat Delay ........... 1 sec
[X] - Exit
```

14 To change the **Announce Hot Wheels** setting:

The Messages Settings / Advanced menu shows whether Hot Wheel alarms are to be announced, and/or for which train direction Hot Wheel alarms will be announced. The Announce Hot Wheels option has four possible values:

- "**Yes**" Hot Wheel alarm announcements are made for all detected Hot Wheel alarms
- "**No**" Hot Wheel alarm announcements are suppressed for all detected Hot Wheel alarms. For all Hot Wheel alarms detected, the word "suppressed" will be included in the alarm description printed on the Train Detail report.
- "**N/E Only**" Hot Wheel alarm announcements will be made for trains traveling in the North or East direction but will be suppressed for trains traveling in the South or West direction. The word "suppressed" will be included in any Hot Wheel alarm descriptions printed on the Train Detail report, for trains traveling in the South or West direction.
- "**S/W Only**" Hot Wheel alarm announcements will be made for trains traveling in the South or West direction but will be suppressed for trains traveling in the North or East direction. The word "suppressed" will be included in any Hot Wheel alarm description printed on the Train Detail report, for trains traveling in the North or East direction.

a Select Announce Hot Wheels from the Messages/Advanced menu

The Announce Hot Wheels setting toggles, in succession, between the values: Yes, N/E Only, S/W Only, No (and back to Yes again).

b The Messages/Advanced menu reappears.

15 To change the **Announce High/Wide** setting:
The Messages Settings /Advanced menu shows whether High Load and Wide Load alarms are to be announced, and/or for which train direction High Load and Wide Load alarms will be announced. The Announce High/Wide option has four possible values:

- **"Yes"** High Load and Wide Load alarm announcements are made for all detected High Load and Wide Load alarms
- **"No"** High Load and Wide Load alarm announcements are suppressed for all detected High Load and Wide Load alarms. For all High Load and Wide Load alarms detected, the word "suppressed" will be included in the alarm description printed on the Train Detail report.
- **"N/E Only"** High Load and Wide Load alarm announcements will be made for trains traveling in the North or East direction but will be suppressed for trains traveling in the South or West direction. For trains traveling in the South or West direction, for any High Load or Wide Load alarms detected, the word "suppressed" will be included in the alarm description printed on the Train Detail report.
- **"S/W Only"** High Load and Wide Load alarm announcements will be made for trains traveling in the South or West direction but will be suppressed for trains traveling in the North or East direction. For trains traveling in the North or East direction, for any High Load or Wide Load alarms detected, the word "suppressed" will be included in the alarm description printed on the Train Detail report.

16 To change the **Rebroadcast Time Limit** setting:

The Messages Settings (Advanced) menu shows a value for the Rebroadcast Time Limit setting. If a nonzero value is shown, the value is the number of minutes that you have to request a repeat of the last end-of-train (EOT) message. If zero is shown, the last EOT message is always available for rebroadcast. The train crew makes the actual request for rebroadcast. The repeated message has the word "rebroadcast" at the beginning and ending of the message.

a Select **Rebroadcast Time Limit**.

This prompt appears.

```
Rebroadcast Time Limit message setting (default = 10 min)
Enter a value from 0 to 240:
```

If the new limit has less than three digits, type leading zeros.

b Type the three-digit value.

If you type 000, the last EOT message is always available for rebroadcast. If you type 240, the train crew has four hours (that is, 240 minutes) to request a repeat of the last EOT message.

c Return to Messages Settings (Advanced).

17 To change the **Rebroadcast-DTMF-Code** setting:

The Messages menu shows the rebroadcast-DTMF-code setting. The stored DTMF code contains the touchtone digits that trigger a rebroadcast. Up to ten digits may be entered into this setup parameter including characters '#' and '*'. The SmartScanNG² system monitors radio traffic. When it receives the proper DTMF code, it will rebroadcast the last end-of-train message, provided the request EOT timer hasn't expired.

a Select **Rebroadcast DTMF Code** from the Messages menu.

This prompt appears.

```
Rebroadcast DTMF Code message setting (default = 001)
Enter a dtmf code (Esc to clear):
```

b Type the new DTMF code or press **[Esc]**.

c If you typed one or two digits, press **[Enter]**.

The Rebroadcast DTMF Code option on the Messages menu changes and the Messages menu reappears. If you typed only nondigits and then pressed **[Enter]**, the rebroadcast function would be turned off.

18 To change the **Num Repeat No Defects** setting:

The Messages menu shows a value for how many times the No Defects announcement occurs. Valid values range from 1 through 3. When set to one, the No Defects announcement is spoken once. When set to three the No Defects announcement is spoken three times.

a Select **Num Repeat No Defects** from the Messages menu.

This prompt appears.

```
Num Repeat No Defects message setting (default = 1)
Enter a value from 1 to 3:
```

b Type a digit from 1 to 3.

19 To change the time between EOT message rebroadcasts setting:

The Messages menu shows a value for how many seconds should elapse between EOT announcement repeats. Valid values range from 0 through 240.

a Select **EOT Repeat Delay** from the Messages menu.

This prompt appears.

```
EOT Repeat Delay message setting (default = 1 sec)
Enter a value from 0 to 240:
```

If the new value has less than three digits, type leading zeros to make it three digits long or press **[Enter]** after typing one or two digits.

b To not change the value, press **[Esc]** and return to Messages Settings (Advanced).

4.2.9 AEI Reader Settings

The AEI reader parameters directly affect how the AEI readers operate to acquire tags while a train is passing the site.

To set or change any of the AEI reader parameters:

1 Be sure that the Setup menu is displayed.

The Setup menu looks like this.

```
                    .
                    .
                    .
[H] - Messages Settings
[I] - AEI Settings
[J] - Load Default Setup Parameters
                    .
                    .
                    .
```

2 Select **AEI Settings** to access menu options.

```
AEI Settings
----------------------------------------
[A] - ID Separation ............... 2 IDs
[B] - Consecutive Reads ........ 2 Reads
[C] - MPRR Frequency ....... 915.000 MHz
[D] - MPRR Attenuation ............... 0
[E] - Multi-Track Tag Filter ... Enabled
[F] - AEI Reader Interface
[G] - Tag Reader Test
[X] - Exit
```

ID Separation specifies the number of intervening tags that must be read and reported before a given tag is reported again. Valid values are 1, 2, 3, and 4. The default is 2.

Consecutive Reads specifies the number of times that a tag must be read before it is considered a valid (reportable) tag. Valid values are 1, 2, 3, and 4. The default is 2.

MPRR Frequency specifies the transceiver frequency of the MPRR reader.

MPRR Attenuation sets the RF attenuation in 1 dB increments over a range of 10 dB from a maximum output of 2 W at 0-dB attenuation to a minimum of 200 mW output at 10-dB attenuation.

The **Multi-Track Tag Filter**, when enabled, uses firmware algorithms to filter cross-track reads based on appended timestamps and tag data shared from adjacent SmartScanNG² systems.

The **AEI Reader Interface** allows for direct communication with the AEI tag reader and is used primarily for diagnostic purposes.

The **Tag Reader Test** allows the user to perform an on-sight functionality verification.

3 To <u>change</u> the **ID Separation** parameter:

Select the **ID Separation** option to toggle from 1 to 2, from 2 to 3, from 3 to 4, <u>or</u> from 4 to 1.

4 To change the **Consecutive Reads** parameter:

Select the **Consecutive Reads** option to toggle from 1 to 2, from 2 to 3, from 3 to 4, <u>or</u> from 4 to 1.

5 Select the **MPRR Frequency** setting to change operating frequency.

This message appears.

```
Select a frequency:
[A] - 903.750 MHz
[B] - 911.500 MHz
[C] - 915.000 MHz
[D] - 918.500 MHz
[E] - 921.500 MHz
```

Enter frequency selection. The AEI Reader Settings menu reappears.

6 Select **MPRR Attenuation** to attenuate the RF output signal.

This message appears.

```
MPRR Attenuation AEI setting (default = 0)
Enter a value between 0 and 10:
```

Enter a value “NN” (between 1 and 10) including leading zeros. This parameter sets the RF attenuation in 1 dB increments over a range of 10 dB from a maximum output of 2 W at 0-dB attenuation to a minimum of 200 mW output at 10-dB attenuation.

7 Select **Multi-Track Tag Filter** to toggle between **Enabled** and **Disable**.

When enabled, firmware algorithms are utilized to filter out cross-track reads.

8 To enter the **AEI reader interface**, select option.

This message appears.

```
Entering AEI Reader Interface
<Type EXIT to quit>
```

9 To leave the AEI reader interface:

a Type **EXIT**

b Press **[Enter]**.

10 To initiate the **Tag Reader Test**, select option.

This message appears.

```
Tag Reader Test is now active. It will time out in 2 minutes.
Press any key to exit.
```

During the Tag Reader Test, data from AEI tags passed through the RF field will be displayed beneath this prompt.

11 To leave the AEI Reader Parameters menu and return to the Setup menu, type **X**

This prompt appears.

```
This will save the settings.
Please type 'setup' to save settings.
Type anything else to cancel.
>
```

4.2.10 Load Default Setup Parameters

An option to load default setup parameters is intended to assist installers in setting up a new system. When this menu item is selected, the parameters listed below are assigned the values listed below. A "yes" after a parameter means that it is "enabled." A "no" means that it is "disabled."

```
Alarm Settings
-------------------------------------------------------------------------------
Absolute........................... 190     Differential....................... 117
Hot Wheel.......................... 900     Cold Journal Counter................. 3
Cold Journal Temp.................... 10     Cold Res Counter..................... 3
Differential Enabled................. Yes


Alarm Settings (Advanced)
-------------------------------------------------------------------------------
Carside Slope...................... 2.30     Carside Minimum..................... 120
Res Test: Minimum Rail Avg........... 25     Res Test: Minimum Wheel Avg......... 28
Bearing DSR Capture Temp............. 72     Wheel DSR Capture Temp............... 361
Max Alarms........................... 6

Equipment Settings
-------------------------------------------------------------------------------
Dragger............................ Yes     Hot Wheel........................... Yes
Hot Bearing........................ Yes     High Load........................... No
Wide Load.......................... No      AEI................................. No
Presence Hardware.................. Yes     AC Power Off Monitor............... Yes
Cold Rail Test Mode.......... All trains

Equipment Settings (Advanced)
 ------------------------------------------------------------------------------
Carside Slope...................... No      Winter Cycle................... Oct - Mar
Gate Distance................... 24.0 in    Dragger Debounce Time........... 100 ms
Pre Train Dragger Dist............ 0 ft      Pre Train High/Wide Dist........... 0 ft
Presence Timeout Period......... 10 sec      System Voltage..................... 24 V
Resistor Test................... Enabled    Clearance Mode............... Multiplexed
Clearance Type............... Trip Wire     Transducer Gain................... Normal
*Sun-shot Override................. No      Transducer Type................ Magnetic


Message Settings
-------------------------------------------------------------------------------
Customer Name...................... Yes     Axles............................... Yes
Speed.............................. Yes     Temperature......................... Yes
Slow............................... No      Power Off........................... No
Length............................. No      Cars Count.......................... No
Lft/Rt Alarm Ref................... No      Car ID With Alarm................... No
Announce Cold Rail................. Yes

Message Settings (Advanced)
-------------------------------------------------------------------------------
Announce Hot Wheels................ Yes     Announce High/Wide................. Yes
Rebroadcast Time Limit........... 10 min     Rebroadcast DTMF Code............... 001
Num Repeat No Defects............... 1      EOT Repeat Delay................... 1 sec
                    .
                    .
                    .
```

* Currently unsupported by UP firmware.

```
                    .
                    .
                    .
Network Settings
--------------------------------------------------------------------------------
Use Static Address................... Yes     Static Address............ 192.168.1.101
Static Mask............... 255.255.255.0     Act as DHCP Server................... No
TELNET Port........................... 23     FTP Port............................. 21
HTTP Port............................. 80     HTTPS Port......................... 8080
Use Wifi............................... No     Wifi SSID...................... NG2 Wifi


Wind Settings
--------------------------------------------------------------------------------
Wind Monitor............... Not Installed     High Wind Alarm Limit............ 50 mph
Display Wind Diagnostics............... No     Wind Poll Interval............... 15 sec
Slow Wind Speed Limit............... 2 mph     Upper Interval Identical Limit... 30 min
Lower Interval Identical Limit.. 360 min     Wind Gust Interval................ 5 min
Suspicious Temp. Interval....... 720 min     Re-enable Wind Updates........... 10 min
Wind Alarm Reporting Interval..... 5 min

Port Settings
--------------------------------------------------------------------------------
COM1................... Baud 19200 NA/NA     COM2................... Baud 19200 NA/NA
COM3................... Baud 19200 NA/NA     COM4................... Baud 19200 NA/NA
COM5................... Baud 19200 NA/NA     COM6................... Baud 19200 NA/NA
RS485................... Baud 9600 NA/NA

AEI Settings
--------------------------------------------------------------------------------
Tag Reader Type.................... None     ID Separation......................... 2
Consecutive Reads...................... 2     MPRR Frequency............... 915.000 MHz
MPRR Attenuation....................... 0     Multi-Track Tag Filter............... No
```

To load the default setup parameters:

1 Be sure that the Setup menu is displayed.

The Setup menu looks like this.

```
                    .
                    .
                    .
  [I] - AEI Settings
  [J] - Load Default Setup Parameters
  [K] - COM Port Settings
  [L] - Network Settings
                    .
                    .
                    .
```

2 Select **Load Default Setup Parameters**.

This prompt appears.

```
This will save the settings.
Are you sure? (y/n)
```

3 To not load default setup parameters:

Type **N**

This message appears followed by the Setup menu.

```
Settings will not be saved
```

4 To load default setup parameters:

Type **Y**

This message appears followed by the Setup menu.

```
Saving settings
Settings saved
```

Loading takes about a second. When finished, the Setup menu reappears.

4.2.11 COM1, COM2, COM3, COM4, COM5, & COM6

To change the parameters for serial port **COMx**:

1. Be sure that the Setup menu is displayed.

   The Setup menu looks like this.

```
                    .
                    .
                    .
[J] - Load Default Setup Parameters
[K] - COM Port Settings
[L] - Network Settings
                    .
                    .
                    .
```

2. Select the **COM Port Settings** submenu to view options.

```
COM Port Settings
----------------------------------------
[A] - COM1 19200
[B] - COM2 19200
[C] - COM3 19200
[D] - COM4 19200
[E] - COM5 19200
[F] - COM6 19200
[G] - RS485 9600
[H] - Page Lines ..................... 30
[X] - Exit
```

3. Select the **COMx** option to edit current settings.

```
Uart Settings
----------------------------------------
[A] - Baud Rate .................. 19200
[B] - Flow Control ............. None
[X] - Exit
```

4. Select **Baud Rate** to incrementally step through the selection options. Available settings are: 150, 300, 600,1200, 2400, 4800, 9600, 19200, 38400, 57600, and 115200.
5. To change the **Flow Control**, select option to incrementally step through available options of None, HW (hardware), or SW (software).
6. The **Page Lines** parameter defines the number of lines the Serial Interface outputs before pausing and asking whether the user wants to continue, abort, etc. Setting this parameter to zero disables paging (reports print in their entirety without pausing.
7. If you are done changing the parameters for **COM Port Settings**, type **X**

4.2.12 Network Settings

To change the **Network Settings**:

1 Be sure that the Setup menu is displayed.

The Setup Menu looks like this.

```
                    .
                    .
                    .
  [L] - Network Settings
  [M] - Talker Mode ........... Talk Freely
  [N] - Velocity ................... COM 3
  [O] - Multitech ............... Disabled
  [P] - Wind Settings
  [X] - Exit
```

2 Select the **Network Settings** menu.

A menu and prompt like this appears. To access/change any of the menu options, type the letter that corresponds to the desired setting.

```
Network Settings
----------------------------------------
[A] - IP Settings
[B] - Use Wifi ..................... Yes
[C] - HTTP port ..................... 80
[D] - HTTPS port ................. 8080
[E] - FTP port ...................... 21
[F] - TELNET port ................... 23
[G] - Load default network settings
[X] - Exit
```

WARNING: Changes to any of the SmartScanNG² network settings **will not take effect** until after the system has been restarted. Before restarting the system, be certain that all changes have first been saved. After making any changes you will be prompted to type in the word “setup” when you exit the Network Settings menu. This will cause any changes made to be saved.

3 **IP Settings** – This option provides a menu through which you can customize the IP parameters of the SmartScanNG²'s external Ethernet connection.

To view or change the SmartScanNG²'s IP settings, select the IP Settings option. The SmartScanNG² will display the following menu:

```
SmartSCAN NG2, MP/KP:0060.0, Track:Single
08/21/2017 10:09:17, 13.3V, 50°F
IP Settings
----------------------------------------
[A] - Use static address ........... Yes
[B] - Static IP .......... 192.168.1.101
[C] - Static mask ........ 255.255.255.0
[D] - Default gateway ...... 192.168.1.1
[E] - DNS Server ........... 192.168.1.1
[X] - Exit
```

Use Static Address This parameter specifies whether the SmartScanNG² use its configured Static IP address for external Ethernet communications (Yes), or to retrieve its external IP address from a DHCP server (No).

Static IP This parameter specifies the IP address to use to connect to the SmartScanNG² when the Use Static Address option is set to Yes.

Static Mask This parameter specifies the subnet mask to use when the Use Static Address parameter is set to Yes.

Default Gateway This option specifies the address of the remote server/router through communications with the SmartScanNG² will be routed.

DNS Server This parameter specifies the Domain Name Server that the SmartScanNG² can use for lookup services.

4 **Use WiFi -** This option is used to enable or disable the SmartScanNG²'s WiFi interface. When selected, the option toggles between Yes and No. When set to Yes, the WiFi interface is enabled.

5 **HTTP Port** This parameter is used to specify the TCP port number for the SmartScanNG²'s HTTP interface. This is the interface/port through which the SmartScanNG² serves its Web page interface.

6 **HTTPS Port** This parameter is used to specify the port number for the SmartScanNG²'s secure HTTP interface.

7 **FTP Port** This parameter is used to specify the TCP port number that the SmartScanNG² uses for communication via the FTP protocol.

8 **TELNET Port** This parameter specifies the TCP port number that the SmartScanNG² uses for communication via the Telnet protocol. The SmartScanNG² serial based menus are available through this port and protocol.

9 **Load Default Network Settings.** To set the SmartScanNG²'s network parameters to their default configuration select the Load Default Network Settings option from the Network Settings menu

```
Network Settings
----------------------------------------
[A] - IP Settings
[B] - Use Wifi ..................... Yes
[C] - HTTP port ..................... 80
[D] - HTTPS port ................. 8080
[E] - FTP port ...................... 21
[F] - TELNET port ................... 23
[G] - Load default network settings
[X] - Exit
```

SmartScanNG² Default Network Settings
Ext. interface 0.0.0.0
Note: The external interface defaults to an address provided by a DHCP server.
Use Wifi No
HTTP port 80
HTTPS port 8080
FTP port 21
TELNET port 23

External Ethernet Default Settings
Use static address No
Note: A DHCP server will be required to furnish the external IP address
Static IP 192.168.1.101
Static mask 255.255.255.0
Default gateway 192.168.1.1
DNS Server 192.168.1.1

4.2.13 Talker Mode

To change the **Talker Mode**:

1 Be sure that the Setup menu is displayed.

The Setup Menu looks like this.

```
                    .
                    .
                    .
[M] - Talker Mode .......... Talk Freely
[N] - Velocity .................... COM 3
[O] - Multitech ............... Disabled
[P] - Wind Settings
[X] - Exit
```

The **Talker Mode option** lets you select when announcements are given during and after train passage. The **Talk Freely** mode is the normal talker mode. In this mode, the system makes announcements even when defects aren't detected. In **Talk on Defect** mode, the system makes announcements only when a defect is detected. If you don't select a talker mode, it defaults to Talk Freely. **Talk Reduced** is a combination of Talk Freely and Talk On Defect modes. In this mode, trains entering a site always receive an Arrival announcement but only receive an EOT announcement if the train contained an alarm or Integrity Failure.

2 Select the **Talker Mode** option to toggle between **Talk Freely**, **Talk on Defect**, and **Talk Reduced**.

4.2.14 Velocity

The **Velocity** parameter defines the COM port used to connect to the Velocity board. To change the Velocity setting:

1 Be sure that the Setup menu is displayed.

The Setup Menu looks like this.

```
                    .
                    .
                    .
[N] - Velocity ................... COM 3
[O] - Multitech ............... Disabled
[P] - Wind Settings
[X] - Exit
```

2 Select **Velocity** to step through COM port settings. Available options are COM2, COM3, COM4, COM6, or Disabled.

4.2.15 Multitech

The **Multitech** parameter defines the COM port connected to an analog modem (calling into the modem provides access to a Serial Interface). To change the Multitech setting:

1 Be sure that the Setup menu is displayed.

The Setup Menu looks like this.

```
                    .
                    .
                    .
[O] - Multitech ............... Disabled
[P] - Wind Settings
[X] - Exit
```

2 Select **Multitech** to step through COM port settings. Available options are COM2, COM3, COM4, COM6, or Disabled.

4.2.16 Wind Settings

To change the **Wind Settings**:

1. Be sure that the Setup menu is displayed.

   The Setup Menu looks like this.

```
                    .
                    .
                    .
[O] - Multitech ............... Disabled
[P] - Wind Settings
[X] - Exit
```

2. Select **Wind Settings** to view menu options:

```
Wind Settings
----------------------------------------
[A] - Wind Monitor ........................ Not Installed
[B] - High Wind Alarm Limit ...................... 50 mph
[C] - Display Wind Diagnostics ....................... No
[D] - Wind Poll Interval ......................... 15 sec
[E] - Slow Wind Speed Limit ....................... 2 mph
[F] - Lower Interval Identical Limit ........... 360 min
[G] - Upper Interval Identical Limit ............ 30 min
[H] - Wind Gust Interval ......................... 5 min
[I] - Suspicious Temp. Interval ............... 720 min
[J] - Re-enable Wind Updates ..................... 10 min
[K] - Wind Alarm Reporting Interval ............... 5 min
[X] - Exit
```

3. Select **Wind Monitor** to toggle the setting from Installed (enabled) to Not Installed (disabled).

4. The **High Wind Alarm Limit** is a wind speed (in MPH) at or above which the detector flags a high wind alarm. Select High Wind Alarm Limit to change setting:

```
High Wind Alarm Limit setting (default = 50 mph)
Enter a value from 30 to 80:
```

5. Select **Display Wind Diagnostics** to toggle setting from Yes (enabled) to No (disabled).

6. Select **Wind Poll Interval** to modify the time interval (in seconds) that the detector polls the wind monitor for new wind data.

```
Wind Poll Interval setting (default = 15 sec)
Enter a value from 1 to 30:
```

The detector contains logic for flagging errors if a wind monitor reports identical wind speed or wind direction readings for a specified interval. This logic uses the below three parameters. The **Slow Wind Speed Limit** parameter defines (in MPH) a wind speed considered slow for the site in question. For wind speeds below the Slow Wind Speed Limit value, if the wind monitor reports a constant wind speed or wind direction value for the time interval defined by the **Lower Interval Identical Limit** (in minutes), the detector flags a corresponding error (speed or direction). For wind speeds equal to or above the Slow Wind Speed Limit value, if the wind monitor reports a constant wind speed or wind direction value for the time interval defined by the **Upper Interval Identical Limit** (in minutes), the detector flags a corresponding error (speed or direction).

7 Select **Slow Wind Speed Limit** to modify setting (in miles per hour)..

```
Slow Wind Speed Limit setting (default = 2 mph)
Enter a value from 0 to 5:
```

8 Select **Lower Interval Identical Limit** to modify the setting (in minutes).

```
Lower Interval Identical Limit setting (default = 360 min)
Enter a value from 10 to 600:
```

9 Select **Upper Interval Identical Limit** to modify the setting (in minutes).

```
Upper Interval Identical Limit setting (default = 30 min)
Enter a value from 10 to 60:
```

10 A wind gust is a continuous record of the highest wind speed recorded during a defined time interval. The Wind Gust Interval parameter defines this time interval (in minutes). For example, if the Wind Gust Interval is five minutes, the wind gust value records the highest wind speed reported during the previous five minutes. Select **Wind Gust Interval** to modify the setting (in minutes).

```
Wind Gust Interval setting (default = 5 min)
Enter a value from 3 to 10:
```

11 Suspicious Temp. Interval: This parameter functions like the Lower Interval Identical Limit and Upper Interval Identical Limit parameters described above, but for the temperature probe instead of the wind monitor. If the temperature probe reports a constant temperature value for the time interval defined by the Suspicious Temp. Interval parameter (in minutes), the detector flags a failure error for the probe. Select **Suspicious Temp. Interval** to modify the setting (in minutes).

```
Suspicious Temp. Interval setting (default = 720 min)
Enter a value from 10 to 720:
```

12 Re-enable Wind Updates: Time interval (in minutes) that must elapse after a train stops on the site before the detector again begins polling the wind monitor for data. When a train enters the site, the detector stops polling the wind monitor until either the train clears the site or it stops on the site and this time interval elapses. Select **Re-enable Wind Updates** to modify the setting (in minutes).

```
Re-enable Wind Updates setting (default = 10 min)
Enter a value from 1 to 15:
```

13 Wind Alarm Reporting Interval: Time interval (in minutes) defining how often a detector repeats reporting an existing high wind alarm. This option applies only to detectors using a cellular or satellite modem to communicate with the D3 server. Detectors using a polling radio or IPX modem do not use this parameter. Once a high wind alarm occurs, the detector repeats reporting the alarm's existence at this interval as long as the alarm condition exists. Select **Wind Alarm Reporting Interval** to modify the setting (in minutes).

```
Wind Alarm Reporting Interval setting (default = 5 min)
Enter a value from 2 to 15:
```

DEFAULT WIND SETTINGS

Parameter	Units	Min	Max	Default
High Wind Alarm Limit	MPH	30	80	50
Wind Poll Interval	seconds	1	30	15
Slow Wind Speed Limit	MPH	0	5	2
Lower Interval Identical Limit	minutes	10	600 (10 hours)	360 (6 hours)
Upper Interval Identical Limit	minutes	10	60 (1 hour)	30
Wind Gust Interval	minutes	3	10	5
Suspicious Temp. Interval	minutes	10	720 (12 hours)	720 (12 hours)
Re-enable Wind Updates	minutes	1	15	10
Wind Alarm Reporting Interval	minutes	2	15	5

4.3 System Functions Menu

To execute one or more system functions:

1 Be sure that the Main menu is displayed.

The Main menu looks like this.

```
                    .
                    .
                    .
 [K] - Event log
 [L] - System Functions Menu
 [M] - Replay train
 [N] - Security Menu
 [X] - Exit
```

2 Select the **System Functions Menu**.

A menu and prompt like this appears. To access any of the System Functions menu options, type the letter that corresponds to the desired menu option.

```
System Functions Menu
----------------------------------------
[A] - Radio Test
[B] - Vocabulary Test
[C] - Radio Inhibit
[D] - Start Manual Train
[E] - 1KHz Test Tone
[F] - Auto-Calibration
[G] - Reboot System
[H] - Delete All Stored Train Data
[I] - Clear Event Log
[J] - Update Menu
[K] - Maintenance Menu
[L] - Volume up (3)
[M] - Volume down (3)
[N] - Resistor Baseline Data
[O] - Radio Programming Menu
[P] - Scanner test
[X] - Exit
```

If a train is at the site when the System Functions menu is generated, "***** Train Is Present *****" is displayed just above the menu header for the System Functions menu. During that time, if you select any item on the System Functions menu, you will be prompted with "**Train Is Present. Continue?**" You must type **Y** continue. Note that most items on the Systems Functions menu should <u>not</u> be performed while a train is present at the site.

3 To leave the System Functions menu and return to the Main menu:

a Type **X.** The Main menu reappears.

b Skip the remaining steps.

4 To execute the **Radio Test**:

The Radio Test option on the System Functions menu is used to broadcast a short message through the speaker and through the radio. Using this option lets you verify that the speaker and radio are working properly.

At single-track sites, the text of the message is usually "Testing, U P Detector, milepost (*milepost number*), testing, one, two, three, four, five, four, three, two, one, testing, detector out." At multitrack sites, the text of the message is usually "Testing, U P Detector, milepost (*milepost number*), track (*track designation*), testing, one, two, three, four, five, four, three, two, one, testing, detector out."

```
System Functions Menu
----------------------------------------
[A] - Radio Test
[B] - Vocabulary Test
            .
            .
            .
```

a Select Radio Test from the System Functions menu.

If the system isn't currently making any other voice announcements, it begins the Radio Test announcement. After the announcement finishes, the System Functions menu reappears.

If the system is currently making a voice announcement, the radio test will begin after the announcement.

b While listening to the message, look at the PTT LED on the display panel.

The PTT LED should be lit.

If this LED isn't lit, the system's ability to send a message to the radio might be inhibited by the Radio Inhibit option on the System Functions menu. If the radio is inhibited, the results of this check are invalid.

c Return to System Functions Menu.

5 To execute the **Vocabulary Test**:

The Vocabulary Test option on the System Functions menu is used to enunciate all of the stored speech phrases. This announcement is broadcast through the speaker, but not through the radio. Therefore, it isn't affected by the Radio Inhibit option being enabled.
The text of the message is " 0, 1, 2, 3, 4, 5, 6, 7, 8, 9, A, And, Axle, Axles, B, <BEEP>, Beginning, Box, C, Car, D, Defect, Defects, Degrees, Detected, Detector, Dragging, E, East, Eighth, End, Equipment, F, Failure, Fifth, First, Fourth, From, G, H, Head, High, Hot, Hour, I, ID, In, Integrity, J, Journal, K, L, Left, Length, Load, M, Malfunction, Milepost, Miles, Minus, Minutes, Multiple, N, Near, Ninth, No, North, Number, O, Of, Off, On, Out, P, Per, Point, Power, Q, R, Rail, Rebroadcast, Resistor, Right, S, Scanner, Second, Seventh, Side, Sixth, Sliding, Slow, South, Speed, Stop, T, Temperature, Test, Testing, Third, To, Too, Total, Track, Train, U, V, W, West, Wheel, Wide, Working, X, Y, Your, Z, <TONE> <TONE>."

```
System Functions Menu
----------------------------------------
[A] - Radio Test
[B] - Vocabulary Test
[C] - Radio Inhibit
            .
            .
            .
```

a Select Vocabulary Test from the System Functions menu.

If the system isn't currently making any other voice announcements, it begins the Vocabulary Test announcement. After the announcement finishes, the System Functions menu reappears.

If the system is currently making a voice announcement, the firmware displays the "System Is Currently Making Voice Announcements! Try Again Later" message and the System Functions menu reappears.

b Return to System Functions Menu.

6 To execute the **Radio Inhibit**:

The Radio Inhibit option is used to prevent radio activation for three minutes. During this time, any announcements generated by the system are broadcast through the speaker, but not through the radio. This feature may be overridden by recalling the System Function Menu and selecting the Radio Inhibit option.

```
System Functions Menu
----------------------------------------
[A] - Radio Test
[B] - Vocabulary Test
[C] - Radio Inhibit
            .
            .
            .
```

a Select Radio Inhibit from the System Functions menu.

This prompt appears.

```
PTT disabled for 3 minutes
```

b Select Re-enable radio PTT to disable Radio Inhibit.

```
System Functions Menu
----------------------------------------
[A] - Radio Test
[B] - Vocabulary Test
[C] - Re-enable radio PTT
            .
            .
            .
```

c Return to System Functions Menu.

7 To initiate the **Start Manual Train** function:

In Manual Train Mode, the system opens all the shutters and simulates transducer pulses. During this time, a person can check various aspects of the installed components. The train is marked as a test train. There won't be any voltage (simulated heat) applied to the scanner inputs.

This test gates 256 simulated axles. You can stop this test by selecting the Stop Manual Train option.

The data generated for this test train is stored in the directory.

```
System Functions Menu
----------------------------------------
[A] - Radio Test
[B] - Vocabulary Test
[C] - Radio Inhibit
[D] - Start Manual Train
[E] - 1KHz Test Tone
            .
            .
            .
```

a Select Start Manual Train from the System Functions menu.

This prompt appears.

```
Train Arrival
```

During test train, the TO1 & TO2 LEDs on the Display Panel will flash with each simulated axle.

```
Train Departure
```

b Return to System Functions Menu.

8 To generate the **1KHz test tone**:

The 1KHz Test Tone option is used to generate a continuous 1KHz tone for about 15 seconds. This test tone is broadcast through the speaker and through the radio.

a Select 1KHz Test Tone from the System Functions menu.

If the system isn't currently making any other voice announcements, it begins the tone.

If the system is currently making a voice announcement, the firmware displays the message "System Is Currently Making Voice Announcements! Try Again Later" and redisplays the System Functions menu.

b While listening to the tone, look at the PTT LED on the display panel.

The PTT LED should be lit.

If this LED isn't lit, the system's ability to send a tone to the radio might be inhibited by the Radio Inhibit option on the System Functions menu. If the radio is inhibited, the results of this check are invalid.

c Return to System Functions Menu.

9 To start **Auto-Calibration**:

The SmartScanNG² system self-calibrates its pyrometer interface circuitry. You need only put a preheated calibrated heat source on a scanner and place the system in autocalibration mode by using the Auto-Calibration option. The system then scans all pyrometer inputs until the signal from the calibrated heat source is located. The necessary adjustments to the related interface circuitry are automatically made while the system monitors its own progress by analyzing changes in the heat signals. Once the procedure has been completed, autocalibration mode is disengaged and the calibration results are displayed on your computer. For more details, see ***Appendix E & F - Calibration of Type II/Type III Scanners***.

a Place a preheated calibrated heat source on the scanner to be calibrated.

b Select Auto-Calibration from the System Functions menu.

The SmartScanNG² system will now calibrate the channel associated with the scanner on which the heat source has been placed. Follow along on your interface screen until you see "Auto-Calibration Disengaged." This message is an indication that the system is done with the calibration procedure. To abort the process, press [Esc] (on your computer) or remove the heat source (from the scanner).

c When "Auto-Calibration Disengaged" is displayed on your computer, remove the calibrated heat source.

Upon completion of autocalibration, the system acquires the scanner resistor temperature baseline values. The process begins with a 20-minute wait period in which the resistors are allowed to cool down. The system counts down during this period, sounding a tone each minute. After the 20-minute cool down period, the system opens and closes the shutters for a period of 8 minutes.

d Return to System Functions Menu.

10 To force a **system reboot**:

The System Reboot option allows you to force a system reset through a remote connection. It can also be used locally.

a Select Reboot System from the System Functions menu.

This prompt appears.

```
Reboot System
Are you sure? (y/n)
```

b To not reset the system:

- Type **N**

  The System Functions menu reappears.

c To reset the system, type **Y**

A screen similar to this appears.

```
Restarting in 2 seconds
Waiting 2sec to start 'A' to abort
Configured IP = 0.0.0.0
Configured Mask = 0.0.0.0
MAC Address= 00:03:f4:08:8c:fe

Comm is booting...
Starting telnet task on port 23... running.


The system has finished booting.
```

After a few seconds, the screen displays "The system has finished booting".

11 To **Delete All Stored Train Data**:

The Delete All Stored Train Data option allows you to erase all stored train data. This encompasses all data in the Trains directory, Exceptions directory, and Test Train directory. After deleting all the train data, there isn't any way of regenerating it. The data is gone forever.

```
            .
            .
            .
[G] - Reboot System
[H] - Delete All Stored Train Data
[I] - Clear Event Log
[J] - Update Menu
            .
            .
            .
```

a Select Delete All Stored Train Data from the System Functions menu.

This prompt appears.

```
Are you sure? (y/n)
```

b To not delete all stored train data:

- Type **N**

  The System Functions menu reappears.

c To delete all stored train data, type **Y**

This message appears.

```
Train data cleared.
```

12 To **Clear Event Log**:

The Clear Event Log option is used to erase all events stored in the Event Log and displayed on the Event Log report. After deleting the log, there isn't any way of regenerating it. The data is gone forever.

```
            .
            .
            .
[G] - Reboot System
[H] - Delete All Stored Train Data
[I] - Clear Event Log
[J] - Update Menu
            .
            .
            .
```

a Select Clear Event Log from the System Functions menu.

This prompt appears.

```
Are you sure? (y/n)
```

b To not delete all events stored in the Event Log:

- Type **N**

  The System Functions menu reappears.

c To delete all events stored in the Event Log, type **Y**

The System Functions menu reappears.

13 To access the **Update Menu**:

```
            .
            .
            .
[H] - Delete All Stored Train Data
[I] - Clear Event Log
[J] - Update Menu
[K] - Maintenance Menu
            .
            .
            .
```

a Select Update Menu from the System Functions menu.

This prompt appears.

```
Update Menu
----------------------------------------
[A] - Select Update File
[X] - Exit
```

b Choose the Select Update File from the Update Functions menu.

A prompt similar to this appears.

```
Select update file:

[A] - UP_00-69.ng
[B] - UP_00-70.ng
```

The contents of the above list will be dependent upon the software update files that have been uploaded to the system (via the web page interface).

c Select appropriate file from menu options.

14 To view **Maintenance Menu**:

The Maintenance Menu allows you to view statistics, reset system health, and edit the maintenance email list to which the detector reports maintenance issues.

```
            .
            .
            .
[K] - Maintenance Menu
[L] - Volume up (3)
[M] - Volume down (3)
[N] - Resistor Data
[O] - Radio Programming Menu
[P] - Scanner test
[X] - Exit
```

Select Maintenance Menu from the System Functions menu.

A prompt like this appears.

```
Maintenance Menu
----------------------------------------
[A] - View maintenance statistics
[B] - Reset System Health
[C] - Maintenance email list
[X] – Exit
```

15 To view the **Maintenance Statistics**:

Select the View Maintenance Statistics option from the maintenance menu.

Information like this is displayed.

```
-------------------------------------------------------------------------------
STATISTICS                                Trains Evaluated: 40   Days Spanned: 3

                                     Cold     Cold
                       Resistor  Avg  Scanner  Resistor                Amb
Scanner     Max Avg  Max  Avg   CF  cnt   %  cnt   %          Batt  Temp
-----------------------------------------------------     ----------------
East  Brng   74  24  300  300    0    0   0    0   0     Avg  27.8   +75
West  Brng   67  24  300  295    0    0   0    0   0     Max  28.0   +88
                                                         Min  27.8   +66

.....................................................................
Transducer Data
-----------------------------------
Total Axles Scanned.......... 11988
Total Txd. Miscounts.........    0
Percent Miscounts........... 0.00%
Trains With Miscounts........    0
Trains In Sample.............   40
Percent Trains W/ Miscounts.. 0.00%
-------------------------------------------------------------------------------

Hardware Status
...............................................................................
East Bearing Scanner............Pass
West Bearing Scanner............Pass
East Wheel Scanner..............Disabled
West Wheel Scanner..............Disabled
Gating Transducers..............Pass
Ambient Temperature Probe.......Pass
Power...........................Pass
Presence Hardware...............Disabled
Dragger.........................Pass
High Load Detector..............Disabled
Wide Load Detector..............Disabled
AEI Subsystem...................Pass
```

16 To **Reset System Heath**:

```
Maintenance Menu
----------------------------------------
[A] - View maintenance statistics
[B] - Reset System Health
[C] - Maintenance email list
[X] - Exit
```

a Select Reset System Health from the Maintenance menu.

A prompt like this appears.

```
Are you sure? (y/n)
```

b To not reset system health:

- Type **N**

  The Maintenance Menu reappears.

c To reset system health, type **Y**. This prompt appears.

```
System health cleared
```

The Maintenance Menu reappears.

17 To access **Maintenance email list**:

```
Maintenance Menu
----------------------------------------
[A] - View maintenance statistics
[B] - Reset System Health
[C] - Maintenance email list
[X] - Exit
```

a Select Maintenance email list from the Maintenance menu.

A prompt like this appears.

```
SmartSCAN NG2, MP/KP:1234.5, Track:Single
08/21/2017 16:46:21, 13.0V, 50°F
Maintenance email list
----------------------------------------
[A] – john.smith@southern-tech.com
[P] - New email address
[Q] - Email subject: Cromwell NG2
[X] – Exit
```

b Select New email address to add a new address or select existing address to edit or delete from list.

c Select the Email Subject option to specify the contents of the Subject line that will be applied to any maintenance related emails sent by the SmartScanNG².

d Type X to return to the System Functions menu.

18 Select **Volume up** or **Volume down** to adjust speaker volume:

```
            .
            .
            .
[L] - Volume up (3)
[M] - Volume down (3)
[N] - Resistor Baseline Data
            .
            .
            .
```

There are 10 selectable volume levels (0-9). Level-0 is minimum volume and Level-9 is the maximum volume. The current volume setting is indicated in parenthesis.

a From the System Functions menu, select Volume up to increment current volume level or Volume down to decrement level.

b Return to System Functions menu.

19 To view **Resistor Baseline Data**:

```
              .
              .
              .
  [N] - Resistor Baseline Data
  [O] - Radio Programming Menu
  [P] - Scanner test
  [X] - Exit
```

a Select Resistor Data from the System Functions menu.

Data like this appears.

```
Resistor Data
-------------------------------------------------------------------------------
VOLTS AMB DATE     TIME  STATUS   30  40  50  60  70  80  90 100 110 120 130
     140 160 180 200 220 240 260 280 300 320 340 360 380 400 420 440 460 480
-------------------------------------------------------------------------------
Rail 1 (Type III)
13.9   62 07/27/17 04:01 VALID   198,205,213,213,216,218,223,225,230,234,236
240,248,255,260,265,270,273,275,279,283,285,288,289,292,292,294,295,296
Rail 2 (Type III)
13.3   54 07/18/17 17:13 VALID   211,215,222,227,228,232,235,238,241,246,247
250,259,264,268,272,276,279,284,284,289,290,291,293,296,296,297,300,300
```

For the resistor integrity test that is performed after train passage, there are two methods used to calculate the expected resistor temperature. The baseline resistor integrity test method requires the prerequisite of valid resistor baseline data to be stored in nonvolatile memory. Until the system acquires this data, it applies the interim resistor integrity test method to each train. The resistor data used in the baseline resistor integrity test method appears at the bottom of the System Status report, as shown below.

Included in the data above is a resistor heat profile of each scanner resistor, which covers a period of 30 to 480 seconds, in 10 and 20-second intervals. The differences in resistor heat between the two scanners are due to the cable lengths used in this example. Additional items in the data are the battery voltage measured with the shutters open, the date and time of the data acquisition, and the status of the heat profile data.

In this example, the status of both sets of resistor data is “VALID”, meaning they are being used in the baseline integrity test for each train. There are two other possibilities for status, pending and invalid. If the word “PENDING” appears in the status column, the system is waiting for the resistors to cool before acquiring resistor data or for the battery to charge to 12.5 volts (12V system) or 22.0 volts (24V system). “INVALID” indicates that the system has tried twice and could not acquire valid resistor data. In either case, the system applies the interim integrity test to passing trains, which doesn't require resistor baseline data.

The system acquires the resistor data 20 minutes after the user calibrates the scanners with the autocalibration function. The resistor data acquisition runs unattended. Twenty minutes is the cooling period required to allow the resistors to return to ambient temperature after autocalibration. If a train should interrupt the cooling period, the resistor data acquisition runs 20 minutes after the shutters close following the passage of the train.

During the resistor-cooling period, the system announces through the speaker the following. These announcements aren't broadcast over the radio.

A beep sounds once per minute until two minutes before the resistor test.

At two minutes until the test, "Scanner resistor test beginning in 2 minutes" is voiced.

At one minute until the test, "Scanner resistor test beginning in 1 minute" is voiced.

After the resistor cooling period:

As the test begins, "Testing" is voiced. During this time, the word PENDING appears in the status column of the Resistor Data section.

If the test was successful, "System working" is voiced. The word VALID appears in the status column of the Resistor Data section, signifying that the baseline test applies to each passing train.

If the test wasn't successful, "Scanner resistor test beginning in two-zero minutes" is voiced, meaning that the system will try once more after 20 minutes to acquire an accurate resistor heat profile. During this time, the word PENDING appears in the status column of the Resistor Data section. If the test fails a second time, the word INVALID appears in the same column. The system applies the interim integrity test to each passing train while either PENDING or INVALID appears.

20 To access **Radio Programming Menu**:

```
              .
              .
              .
  [O] - Radio Programming Menu
  [P] - Scanner test
  [X] - Exit
```

a Select Radio Programming Menu from the System Functions menu.

A prompt like this appears.

```
  Identifying radio type…
```

21 To initiate the **Scanner Test**:

```
            .
            .
            .
[O] - Radio Programming Menu
[P] - Scanner test
[X] - Exit
```

The scanner test function allows you to verify scanner accuracy. Place a calibrated heat source over scanner aperture and initiate test. The detector will scan and display the temperature.

Select Scanner Test from the System Functions menu.

Test results like these appear.

```
East rail bearing scanner pot: 75
West rail bearing scanner pot: 72

The test will time out after 10 minutes
You can end the test early by pressing any key.

Beginning test...

East bearing   West bearing
     180             3
```

4.4 Replay Train Announcements

The Replay Train option provides a means for playing the messages that were broadcast as a train passed a site, through the SmartScanNG²'s speaker, and/or for displaying the text for those messages in the users terminal.

To replay the train announcement for a given train:

1. Be sure that the Main menu is displayed.

   The Main menu looks like this.

```
SmartSCAN NG2, MP/KP:1234.5, Track:Single
07/20/2017 10:38:05, 28.1V, 82°F
Main Menu - Comm
----------------------------------------
[A] - Train Summary
[B] - Train Detail
[C] - Exception Summary
[D] - Exception Detail
[E] - System Status Report
[F] - Last Train
[G] - Range of trains
[H] - Train DSRs
[I] - AEI Diagnostic
[J] - Setup
[K] - Event log
[L] - System Functions Menu
[M] - Replay train
[N] - Security Menu
[X] – Exit
```

2. Select Replay train.

   This prompt appears.

```
Enter train number: 266
Exception train? (y/n)
Text only? (y/n)
```

3. Type the train number.
4. Indicate whether the train number you entered was retrieved from the Exception Summary Report or an Exception Detail Report. Type “**Y**” if it did.
5. If you want only to have the message text printed to your computer terminal (don’t also play the audio through the speaker) – Type “**Y**” in response to the prompt “**Text only?**”.
6. If you typed one or two digits, press **[Enter]**.

   If the typed train number is valid, pressing **[Enter]** produces the announcement.

4.5 System Security:

This menu is only available during initial setup or when logged in with administrative password. To view or change system security settings:

Be sure that the Main menu is displayed.

The Main menu looks like this.

```
SmartSCAN NG2, MP/KP:1234.5, Track:Single
07/20/2017 10:38:05, 28.1V, 82°F
Main Menu - Comm
----------------------------------------
[A] - Train Summary
[B] - Train Detail
[C] - Exception Summary
[D] - Exception Detail
[E] - System Status Report
[F] - Last Train
[G] - Range of trains
[H] - Train DSRs
[I] - AEI Diagnostic
[J] - Setup
[K] - Event log
[L] - System Functions Menu
[M] - Replay train
[N] - Security Menu
[X] - Exit
```

Select Security Menu. This menu/prompt appears.

```
Security Menu
----------------------------------------
[A] - Admin password not set
[B] - User password not set
[C] - Change wifi password
[X] - Exit
```

System login with an administrative password allows all access to system menus.

System login with user password allows access to report menus but restricts access to the setup menu, security menu, and systems functions menu.

Select option to set or change password.

```
Enter a new password (20 character maximum):
```

5.0 Web/WiFi User Interface

The web/WiFi interface allows **on-site** and **off-site** communications with the system. This interface allows the user to view reports and to modify system parameters.

To use the WiFi interface locally, you need:

- A phone, tablet, or computer with WiFi capability
- Communications/web browser, which is installed on the device

For remote access via web browser:

- A computer with internet connectivity
- A SmartScanNG²' with Ethernet connectivity

The SmartScanNG² web interface provides:

- Train Summary report
- Train Detail reports
- System Status report
- System configuration
- Event Log report
- Software update

To connect to the SmartScanNG² remotely with a web browser, the controller module must have an Ethernet connectivity routed to the RJ45 connector as shown below.

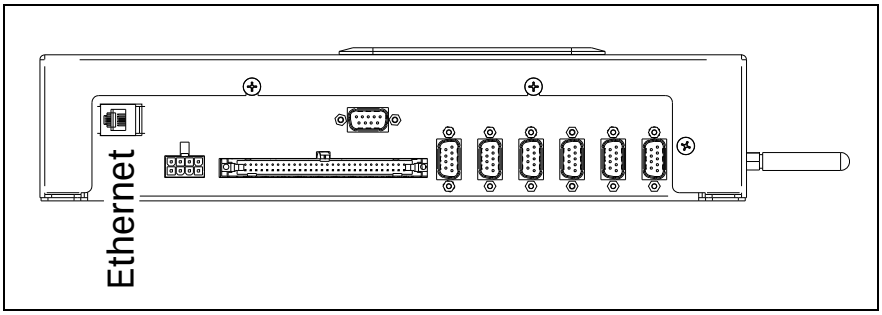

To make a wireless local connection, the WiFi setting must be enabled on the SmartScanNG². Search for and select the NG network on your wireless device. Enter correct WiFi password to make successful network connection.

To view the web page for your SmartScanNG², open a web browser on your computer. Enter the unit's IP address to the address bar of your browser. Login with the security password.

See example below. The contents of your web page will be similar.

SMARTSCAN NG²

Milepost: 1234.5 **Track:** 1 **Site ID:** TYNER1 01-23-2018, 09:21 **Battery:** 28.3V **Temp.:** 42F

Logged in as admin. Logout

Train Data | System Status | Configuration | Logs | Maintenance Info | System Functions | Software Update | Auto Cal

Train Summary Data (Trains Stored: 100) Refresh

Axle Alarms | Integrity Failures | System Alarms | + DSR Records

							Spikes			Speed			Bearing Avg		Bearing Max		AEI			
Trn#	Date	Time	Cars	Axles	TO1	TO2	TO1	TO2	Dir	Min	Max	Exit	East	West	East	West	Tags	Temp	Bat	Alarms
422	01/23/18	07:57	73	448	448	448	0	0	N	4	27	4	22	20	51	50	71	+37F	28.1v	
421	01/23/18	07:31	88	358	358	358	0	0	N	43	47	43	14	14	40	37	83	+40F	28.1v	
420	01/23/18	05:18	148	604	604	604	0	0	N	10	28	10	19	16	52	44	144	+44F	28.2v	
419	01/23/18	00:46	49	336	336	336	0	0	N	23	29	23	21	18	49	39	47	+55F	28.2v	
418	01/23/18	00:15	30	136	136	136	0	0	N	14	15	15	16	14	35	31	28	+55F	28.1v	
417	01/22/18	23:03	33	134	134	134	0	0	N	20	23	23	20	16	39	30	32	+56F	28.1v	
416	01/22/18	21:09	144	582	582	582	0	0	N	30	33	31	16	15	40	34	143	+57F	28.2v	
415	01/22/18	19:12	74	300	300	300	0	0	N	5	14	7	9	9	30	22	74	+55F	28.2v	
414	01/22/18	18:56	49	206	206	206	0	0	N	33	35	33	21	17	42	31	48	+53F	28.2v	
413	01/22/18	18:31	156	644	644	644	0	0	N	38	45	38	23	21	52	52	153	+51F	28.2v	
412	01/22/18	16:08	50	356	356	356	0	0	N	43	45	43	14	14	44	34	48	+49F	28.2v	
411	01/22/18	13:30	67	274	274	274	0	0	N	43	45	43	22	20	52	46	66	+47F	28.1v	
410	01/22/18	12:27	120	486	486	486	0	0	N	44	46	45	19	16	60	48	200	+49F	28.2v	
409	01/20/18	21:03	93	380	380	380	0	0	N	38	41	38	16	16	44	47	182	+39F	28.2v	
408	01/20/18	19:06	81	330	330	330	0	0	N	17	28	17	19	19	57	43	162	+46F	28.1v	
407	01/20/18	17:03	71	306	306	306	0	0	N	40	45	40	25	23	55	49	140	+57F	28.2v	
406	01/20/18	16:41	112	456	456	456	0	0	N	47	49	47	13	12	42	40	124	+56F	28.2v	
405	01/20/18	13:55	63	366	366	366	0	0	N	43	49	43	25	22	48	50	126	+55F	28.2v	
404	01/19/18	09:10	139	564	564	564	0	0	N	18	28	18	11	9	30	29	214	+20F	28.1v	
403	01/19/18	08:39	29	198	198	198	0	0	N	38	40	38	15	15	45	48	57	+15F	28.1v	
402	01/19/18	08:14	93	378	378	378	0	0	N	32	35	32	15	14	35	35	184	+13F	28.1v	
401	01/19/18	06:47	123	496	496	496	0	0	N	14	25	14	19	17	42	42	238	+12F	28.1v	
400	01/19/18	04:29	41	288	288	288	0	0	N	49	53	49	21	20	60	55	82	+14F	28.1v	
399	01/19/18	04:08	119	488	488	488	0	0	N	30	33	31	19	19	47	41	231	+14F	28.1v	
398	01/19/18	03:01	134	544	544	544	0	0	N	15	23	18	8	8	24	21	219	+15F	28.1v	

More

Click the "**More**" button at the bottom to load more train data.

The web page header includes the site's Milepost, Track designator, Date, Time, Battery voltage, Temperature, and Log in status.

The main page includes eight tabs. Train Data, System Status, Configuration, Log, Maintenance Info, System Functions, Software Update, and Auto Cal. Clicking on the tabs will change the display in the main body of the page.

5.1 Train Data

To view the train data, left-click the **Train Data** tab. The Train Summary Data will be displayed as depicted in example above.

To view a train detail report, slide the mouse pointer to highlight the row for the desired train in the Train Summary Data Table. Left-click to select the train. A new window pops up for **Train Details** report. See example below.

Train Details - Train #423 — **Milepost: 1234.5 / 1**

Date: 01/23/18	**Axles:** 254	**Speed**	**Train Length:** 5756	**Amb. temp.:** +42F
Time: 08:57	**T01:** 254	**Min:** 13	**Shutters Open:** 250 sec	**Battery:** 28.1v
Dir: North	**T02:** 254	**Max:** 19		
	Cars: 62	**Avg:** 16		
		Exit: 19		

Scanner Performance

Scanner	Max	Avg	Resistor Read	Resistor Req		CF
East Bearing	49	23	291	236	B	0
West Bearing	39	20	291	239	B	0

Resistor Test Mode: Enabled

Alarm Limits

Alarm	Limit
Absolute	200
Differential	115
Hot Wheel	698
Carside Slope	1.31
Carside Min	155
Cold Rail Temp	10
Announce Hot Wheels	Yes
Announce High/Wide	Yes

AEI System Data

Tags Read	
Antenna 0	0
Antenna 1	63
Length(AEI)	5820

System Alarms

AEI Subsystem: No Tags Ant 0

Integrity Failures

None.

Axle Alarm Summary

None.

Show Announcements | Show DSR Charts

Car	Axle	Bearing East	Bearing West	ON	OFF	PW1	PW2	Alarms
NS 9095								
1	1	2	3	72	0	29	28	
	2	6	9	72	165	28	27	
	3	5	7	72	165	29	29	
	4	5	6	72	1124	26	27	
	5	6	7	72	164	25	23	
	6	2	6	72	167	26	27	
NS 9151								
2	7	7	5	72	415	19	18	
	8	6	5	72	167	19	18	
	9	10	5	72	165	19	19	
	10	7	7	72	1129	24	24	
	11	9	9	72	167	27	27	
	12	7	7	72	167	25	25	
TTGX 974641								
3	13	11	13	72	545	25	25	
	14	27	22	72	132	23	23	
	15	19	9	72	2128	26	26	
	16	19	21	72	133	25	25	

•
•
•

See Section **6.0 Producing Reports** for a detailed explanation of the various report headers.

5.2 System Status

To view the system status, left-click the **System Status** tab. Grab and drag slider bar to view full range of system settings. See example depicted below. By clicking on the header of a section of the display you can hide/show the contents of that section.

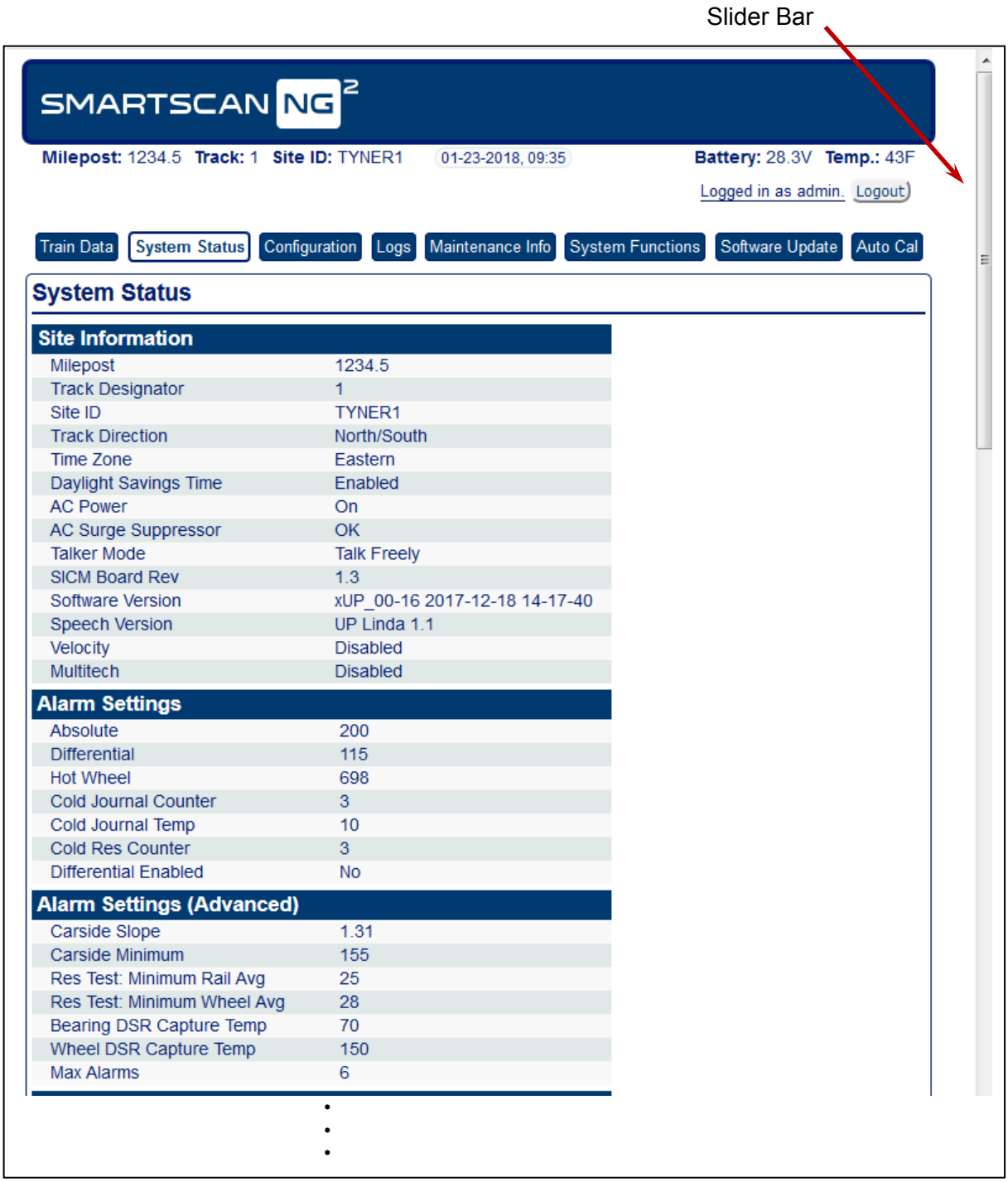

5.3 Configuration

To view the system configuration settings, left-click the **Configuration** tab. Then left-click the category tabs on the left to view or edit the various parameters. If necessary, grab and drag slider bar on the right to view full range of system settings. See samples depicted below.

To modify the **Date/Time** setting, click on the parameter field and type the new value. The **Apply Changes b**utton will be outlined in red when changes have been entered. Left-click the **Apply Changes** button to save changes. An Update Successful message will appear.

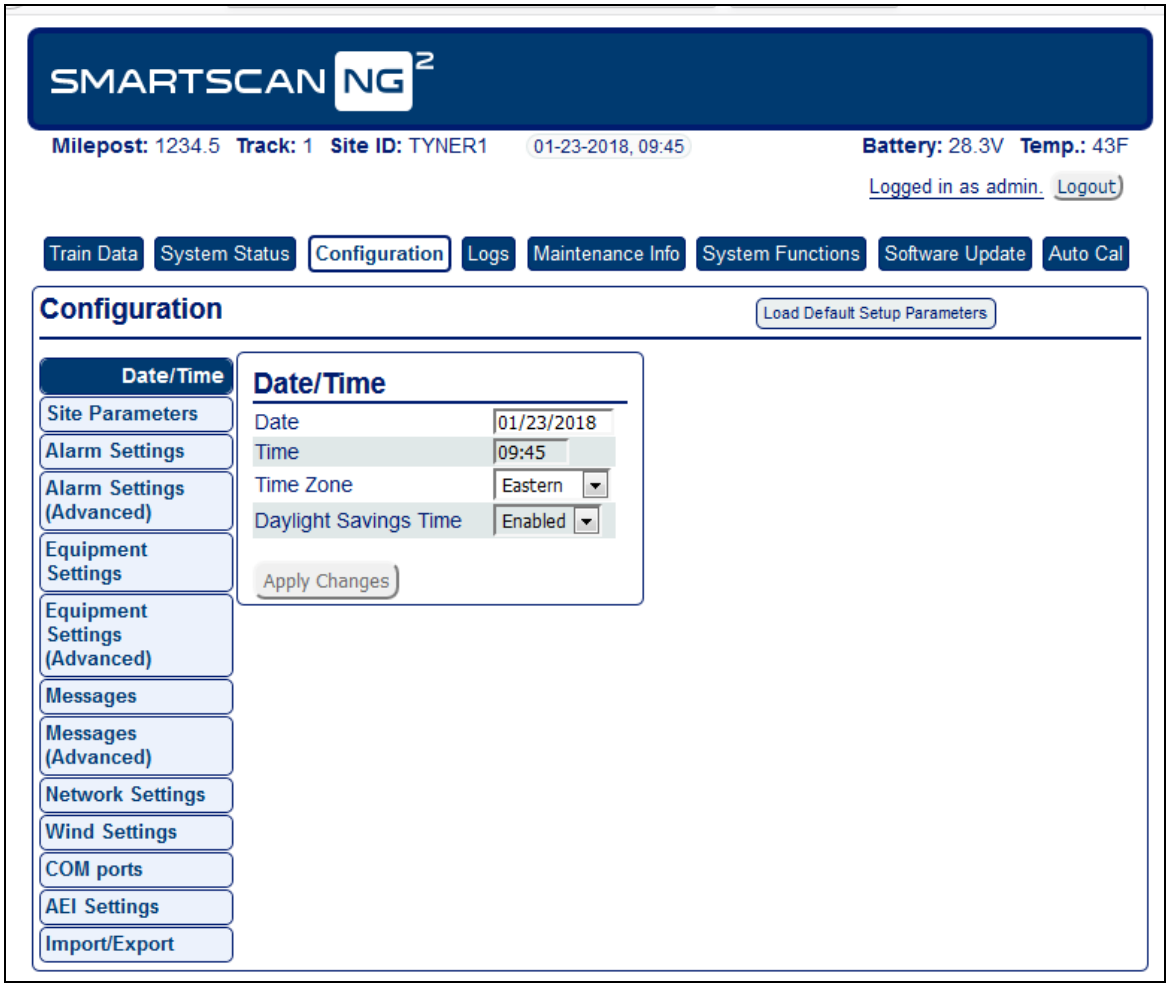

Date/Time

To modify the **Site Parameters** setting, click on the parameter field and type the new value. The **Apply Changes b**utton will be outlined in red when changes have been entered. Left-click the **Apply Changes** button to save changes. An Update Successful message will appear.

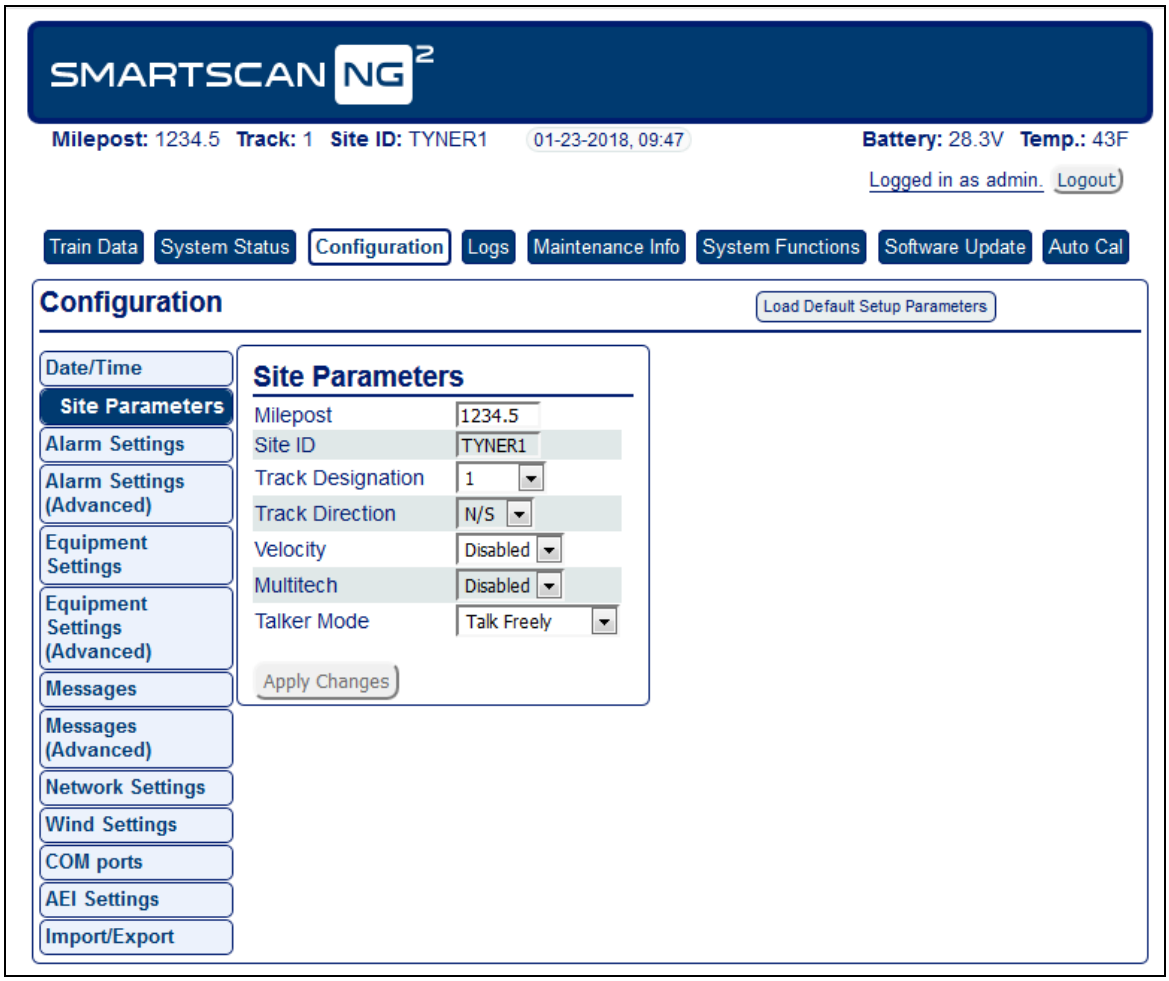

Site Parameters

To modify the **Alarms Settings**, click on the parameter field and type the new value. The **Apply Changes b**utton will be outlined in red when changes have been entered. Left-click the **Apply Changes** button to save changes. An Update Successful message will appear.

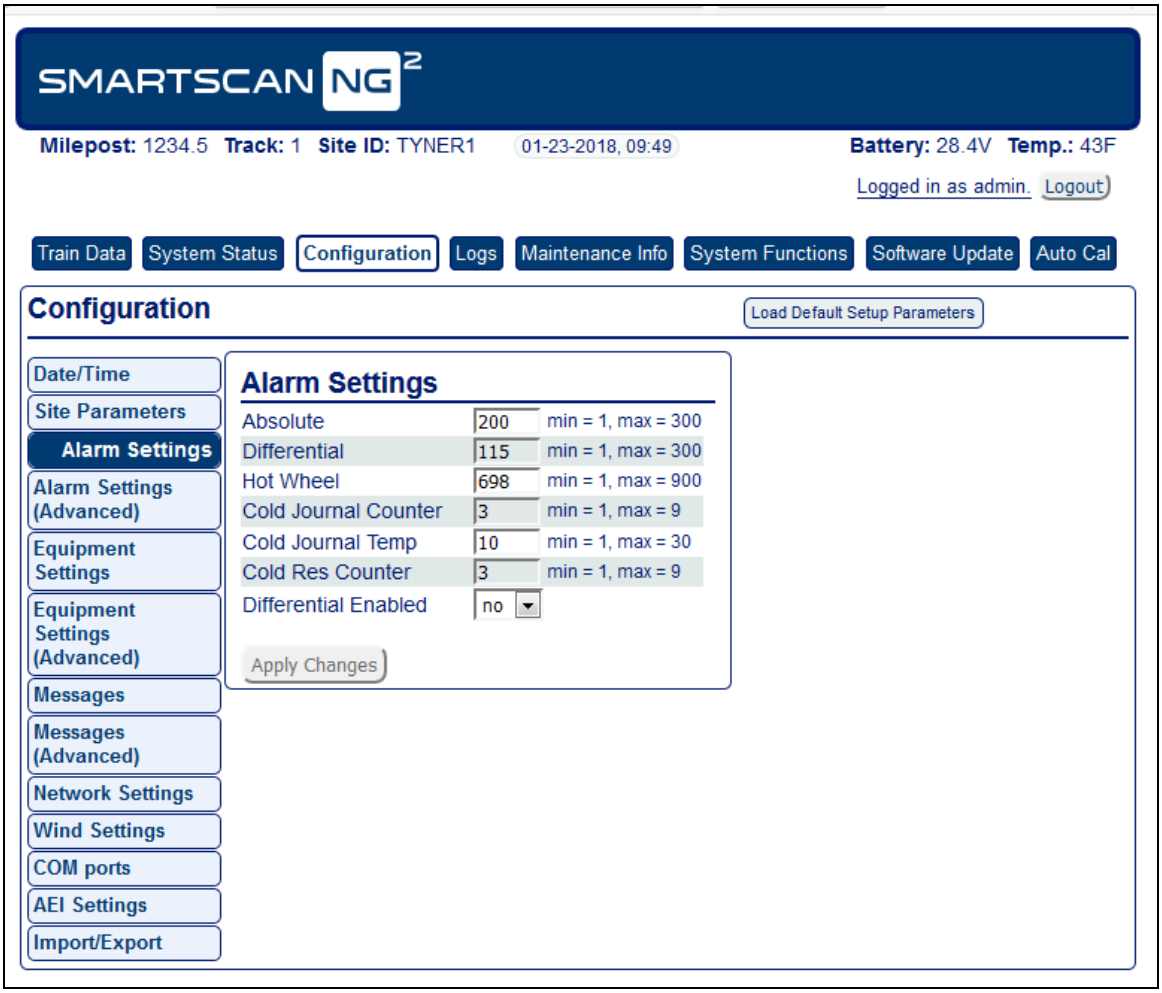

Alarm Settings

To modify the **Alarms Settings (Advanced)**, click on the parameter field and type the new value. The **Apply Changes b**utton will be outlined in red when changes have been entered. Left-click the **Apply Changes** button to save changes. An Update Successful message will appear.

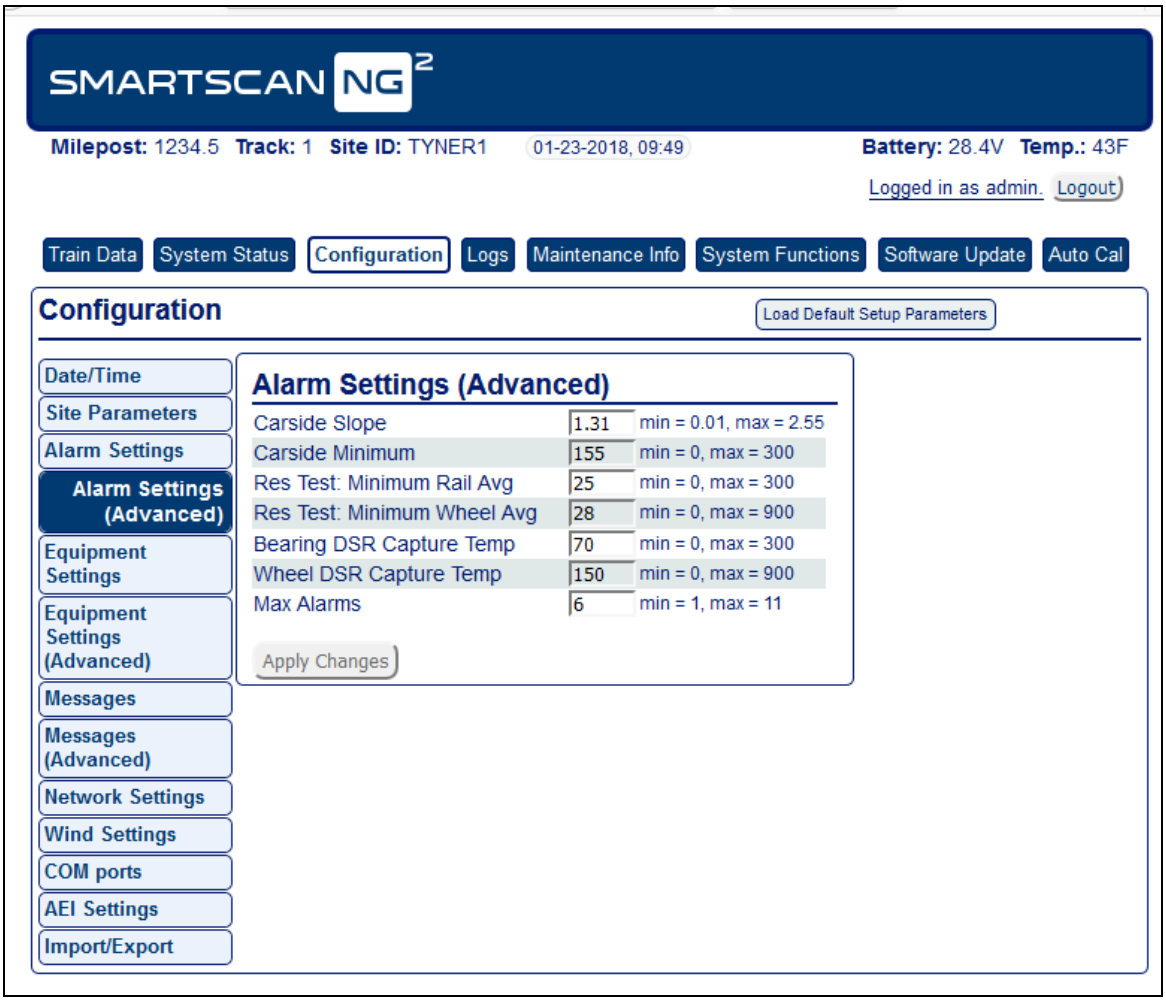

Alarm Settings (Advanced)

To modify the **Equipment Settings**, click on the parameter field and type the new value. The **Apply Changes b**utton will be outlined in red when changes have been entered. Left-click the **Apply Changes** button to save changes. An Update Successful message will appear.

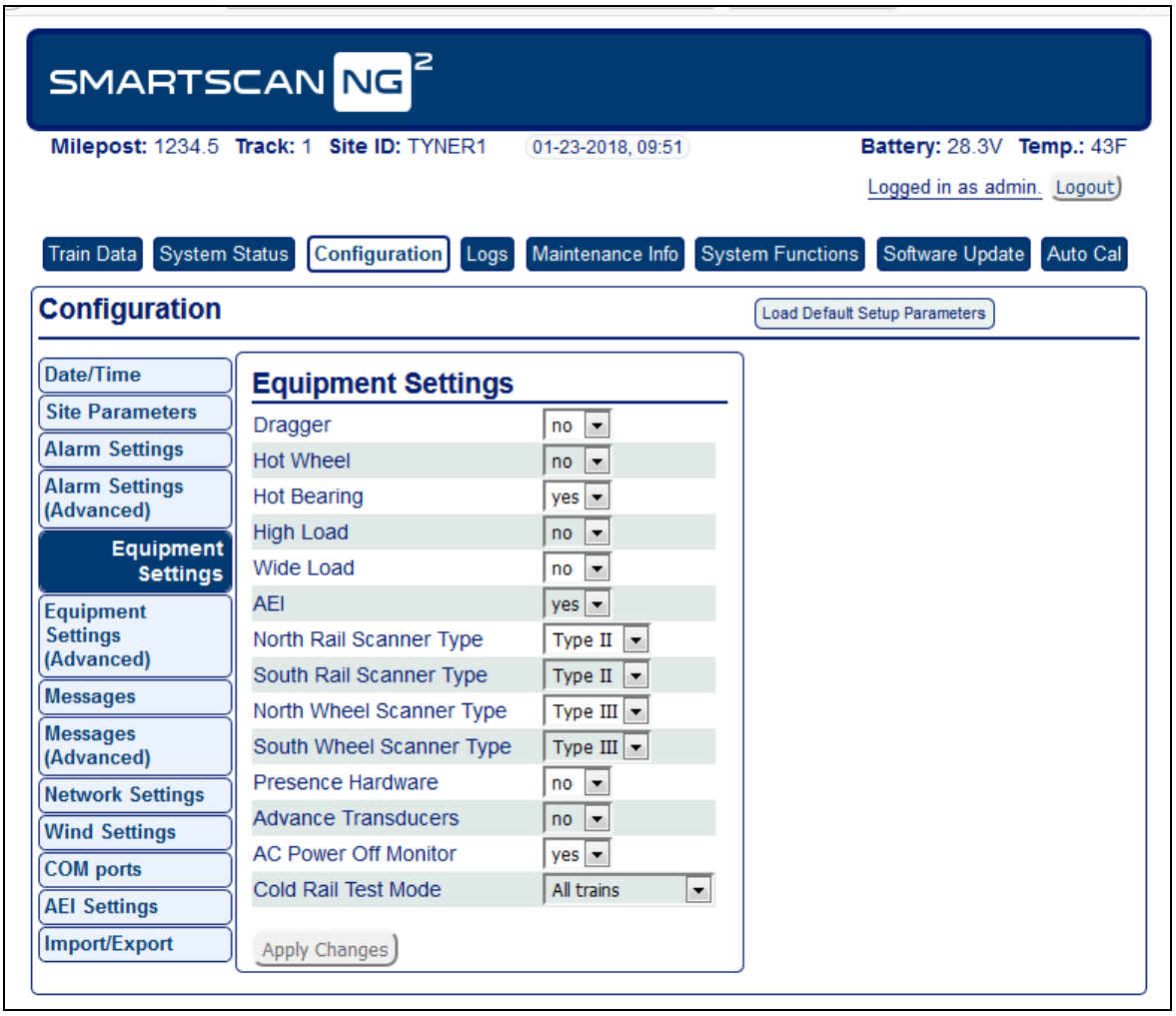

Equipment Settings

To modify the **Equipment Settings (Advanced)**, click on the parameter field and type the new value. The **Apply Changes b**utton will be outlined in red when changes have been entered. Left-click the **Apply Changes** button to save changes. An Update Successful message will appear.

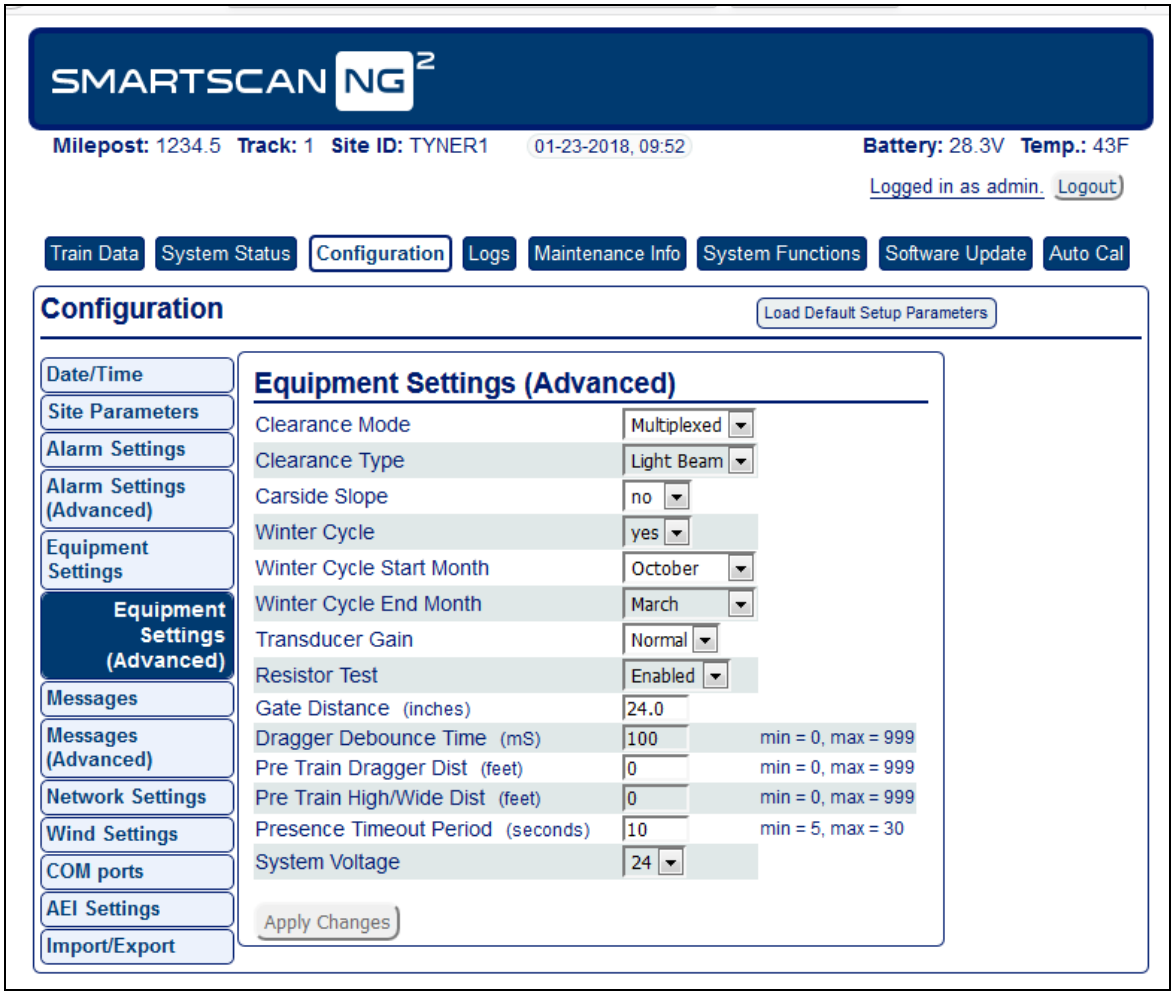

Equipment Settings (Advanced)

To modify the **Messages** settings, click on the parameter field and type the new value. The **Apply Changes b**utton will be outlined in red when changes have been entered. Left-click the **Apply Changes** button to save changes. An Update Successful message will appear.

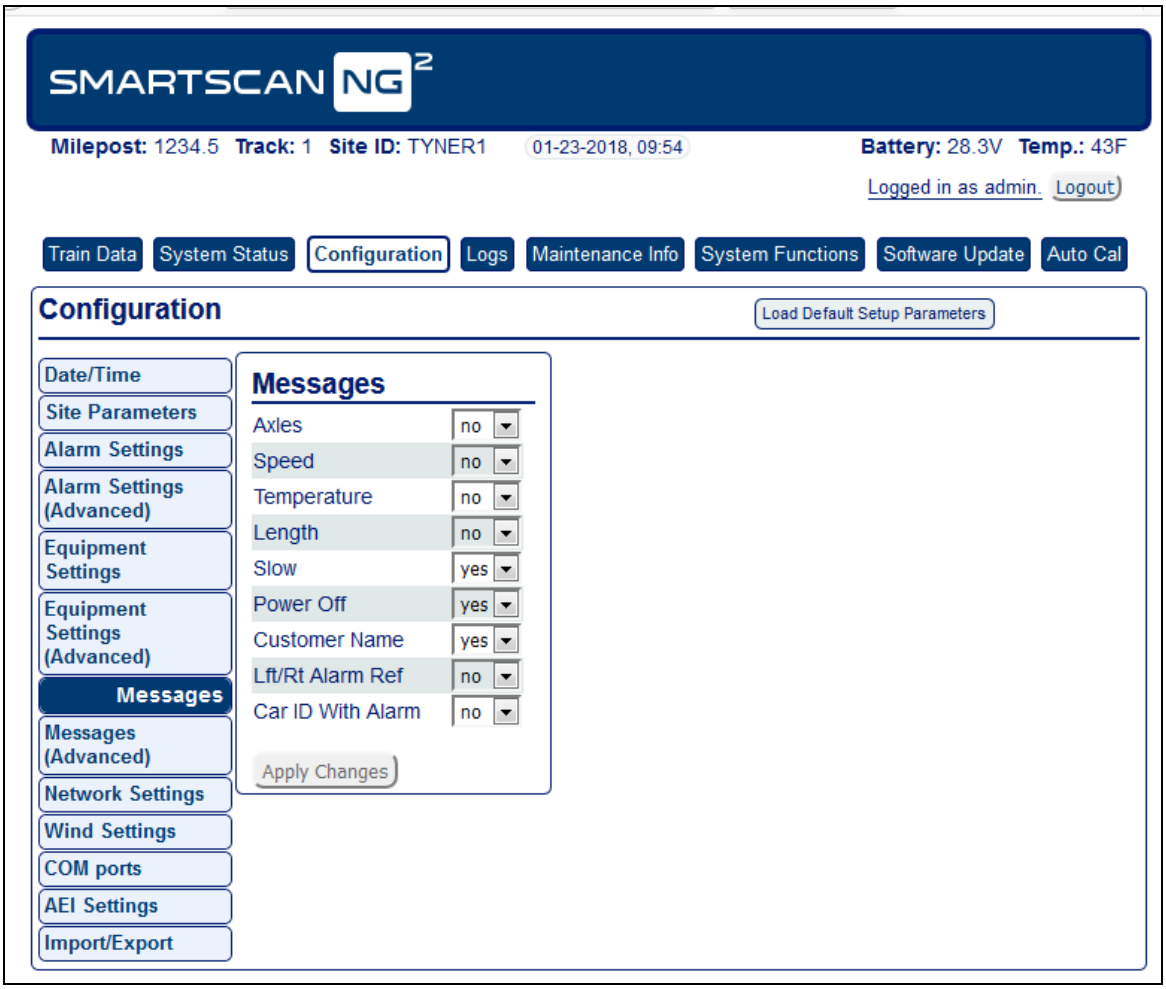

Messages

To modify the **Messages (Advanced)** settings, click on the parameter field and type the new value. The **Apply Changes b**utton will be outlined in red when changes have been entered. Left-click the **Apply Changes** button to save changes. An Update Successful message will appear.

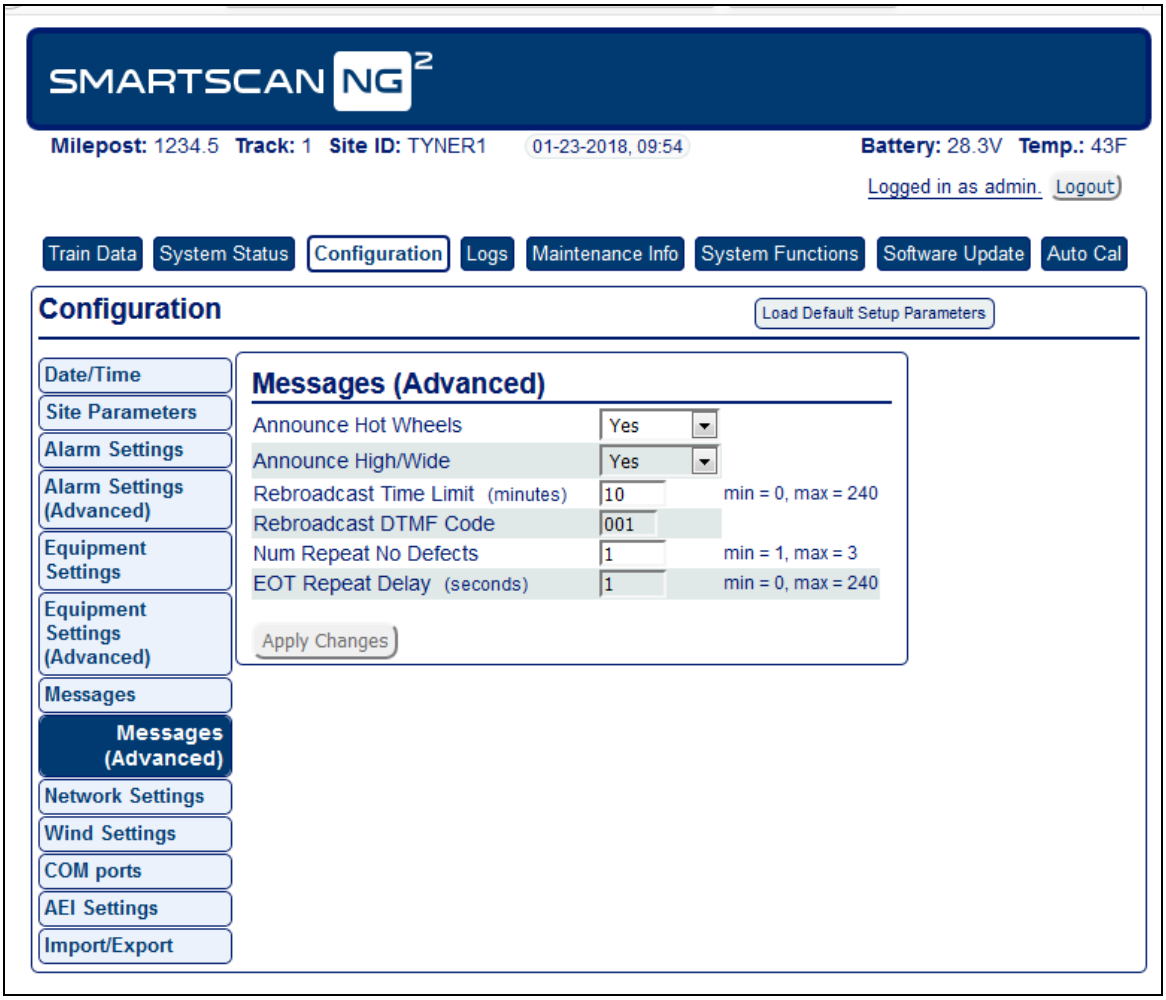

Messages (Advanced)

To modify the **Network Settings**, click on the parameter field and type the new value. The **Apply Changes b**utton will be outlined in red when changes have been entered. Left-click the **Apply Changes** button to save changes. An Update Successful message will appear.

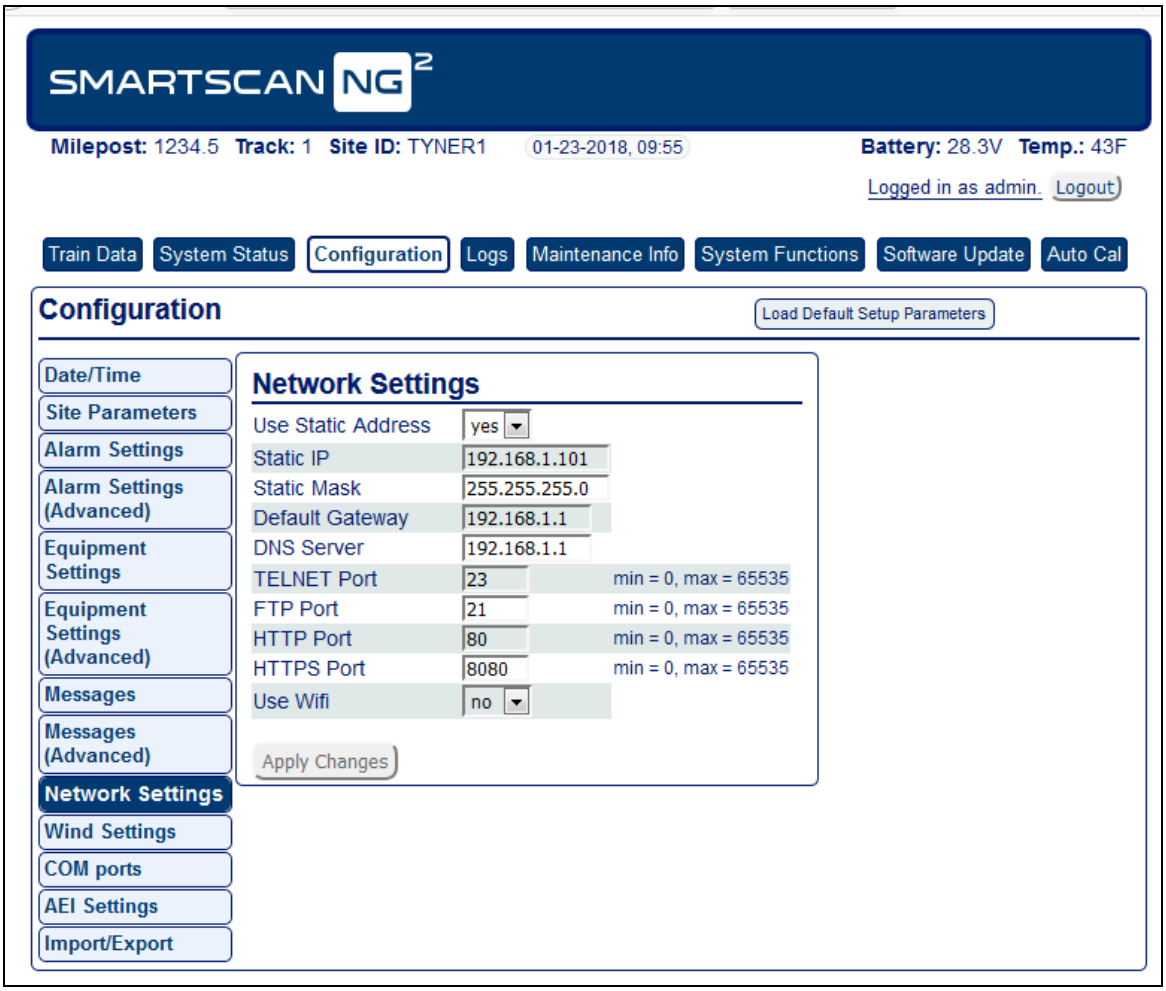

Network Settings

To modify the **Wind Settings**, click on the parameter field and type the new value. The **Apply Changes b**utton will be outlined in red when changes have been entered. Left-click the **Apply Changes** button to save changes. An Update Successful message will appear.

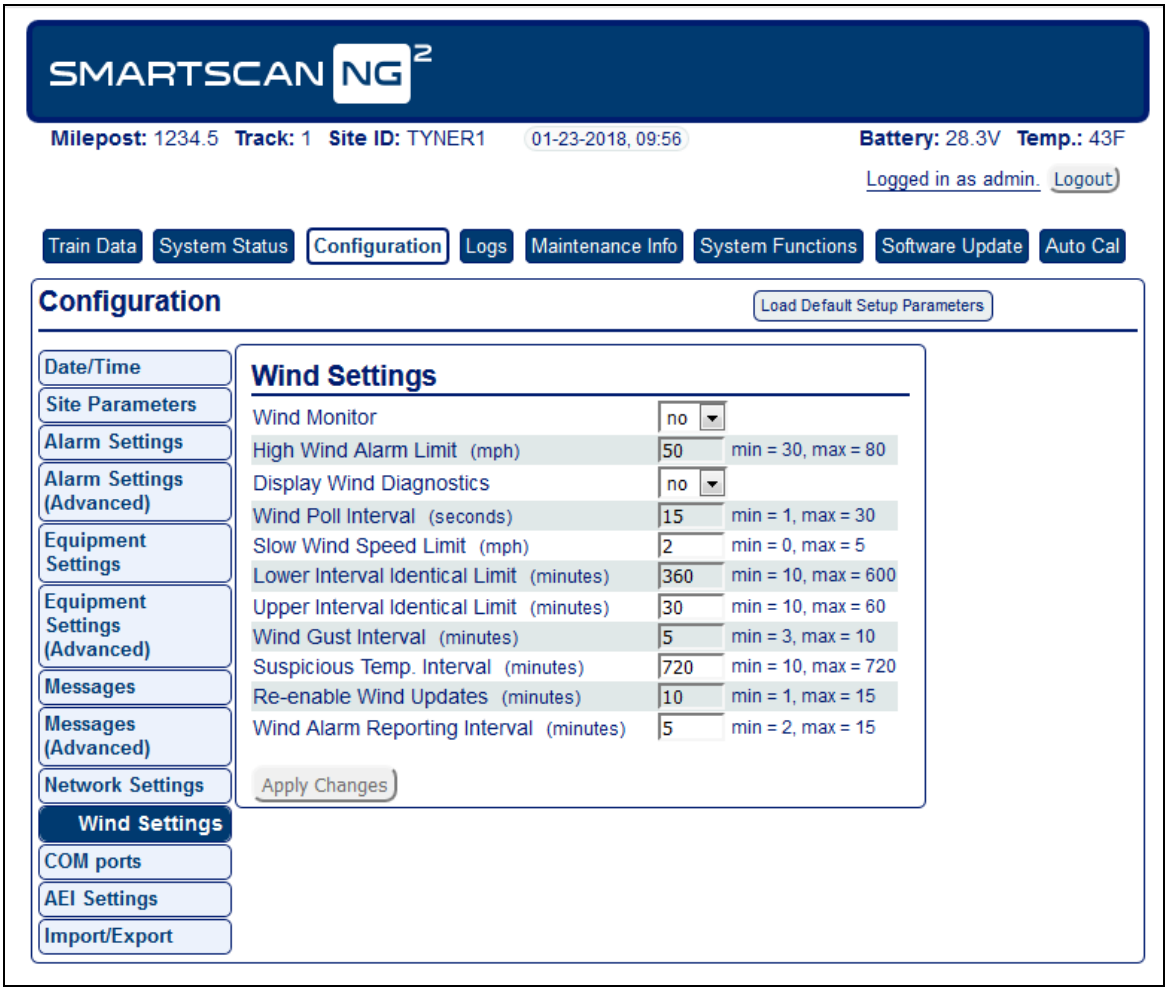

Wind Settings

To modify the **COM Settings**, click on the parameter field and type the new value. The **Apply Changes b**utton will be outlined in red when changes have been entered. Left-click the **Apply Changes** button to save changes. An Update Successful message will appear.

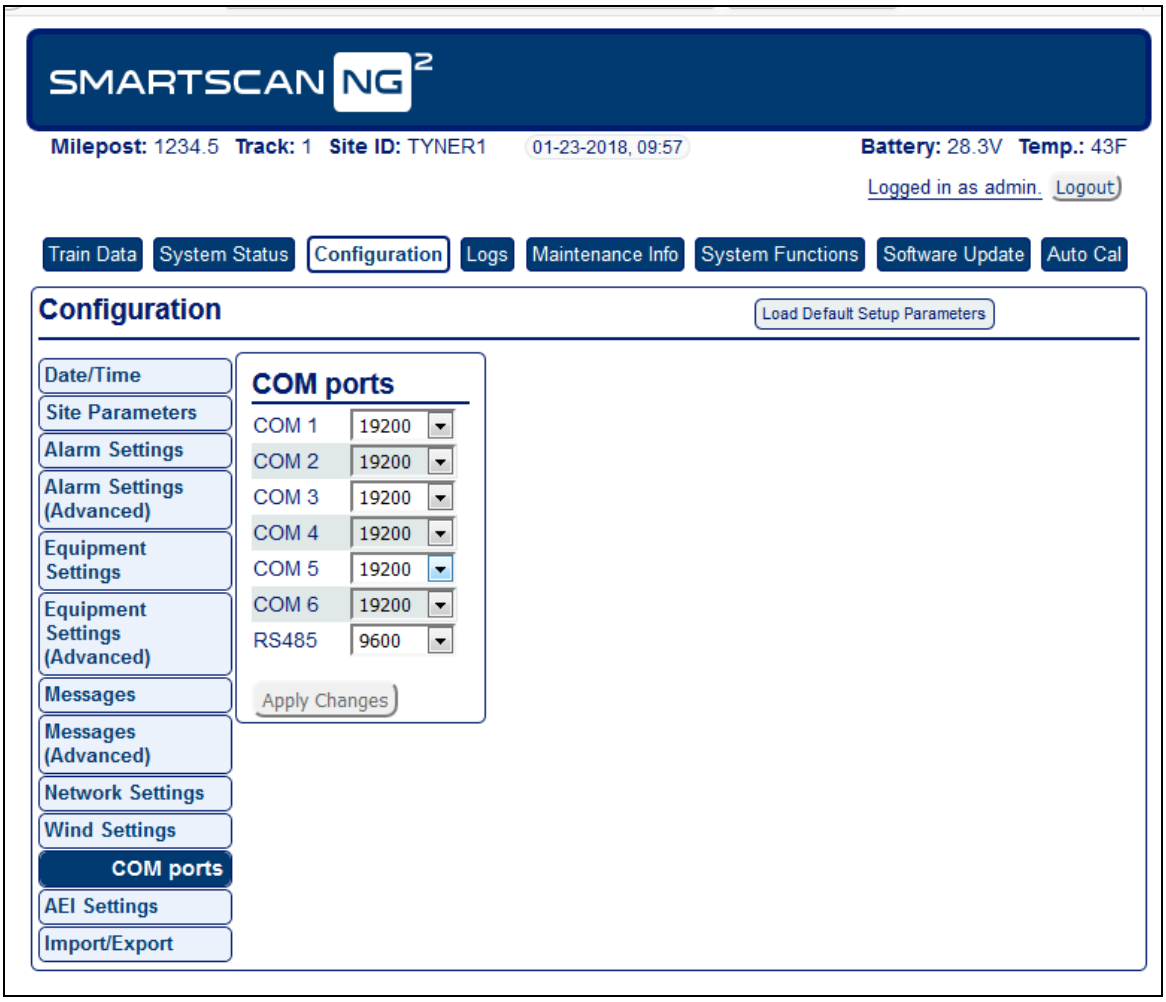

COM Ports

To modify the **AEI Settings**, click on the parameter field and type the new value. The **Apply Changes b**utton will be outlined in red when changes have been entered. Left-click the **Apply Changes** button to save changes. An Update Successful message will appear.

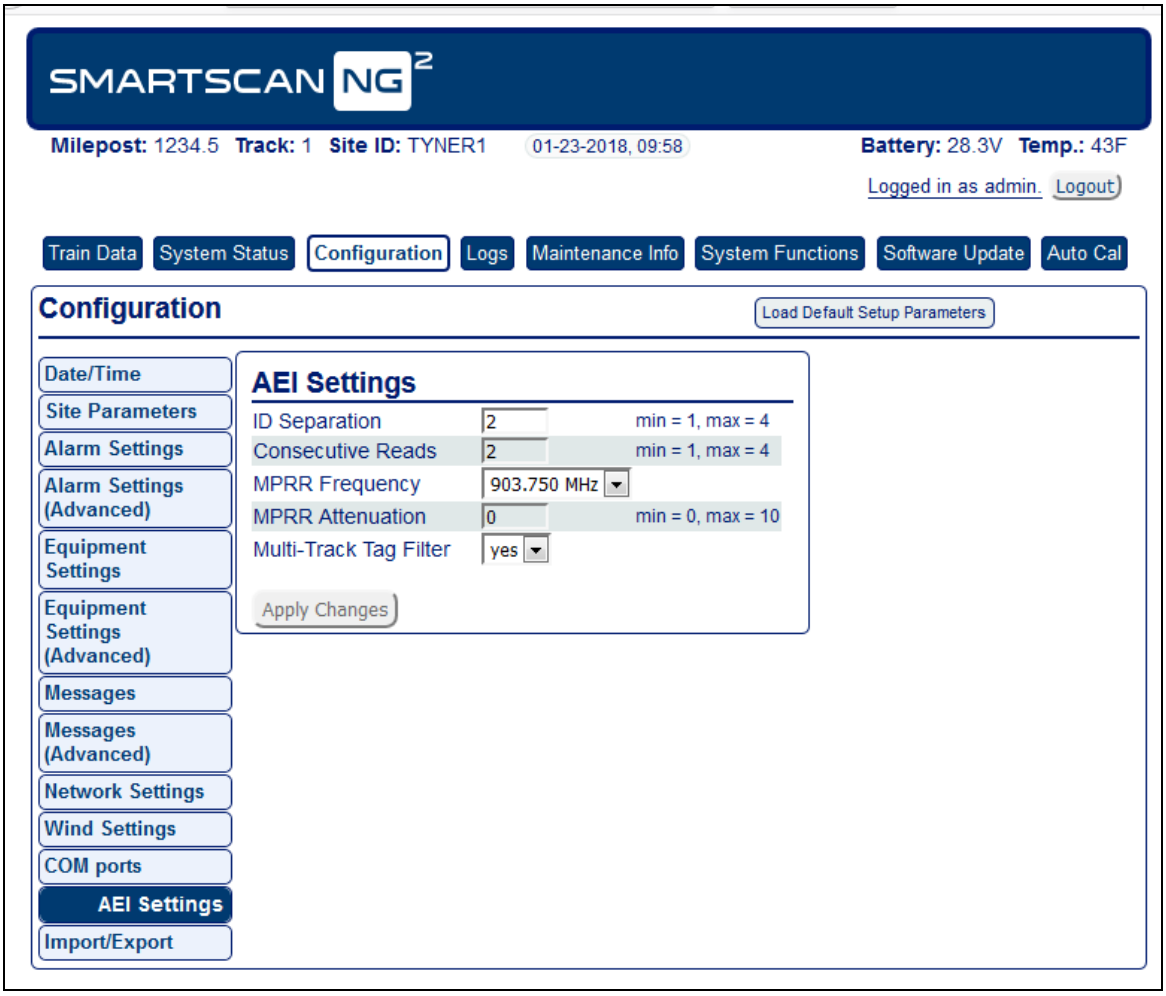

AEI Settings

To **Export** settings, check the box(es) next to the desired settings (**General**, **Network**, **Security**, or **Calibration**). Left click **Export** to export file in .json format.

To **Import** settings, you must have the appropriate import file available in .json format. Check the box(es) for the desired settings you wish to import (**General**, **Network**, **Security**, or **Calibration**). Left click **Import** then select the .json file from the browser.

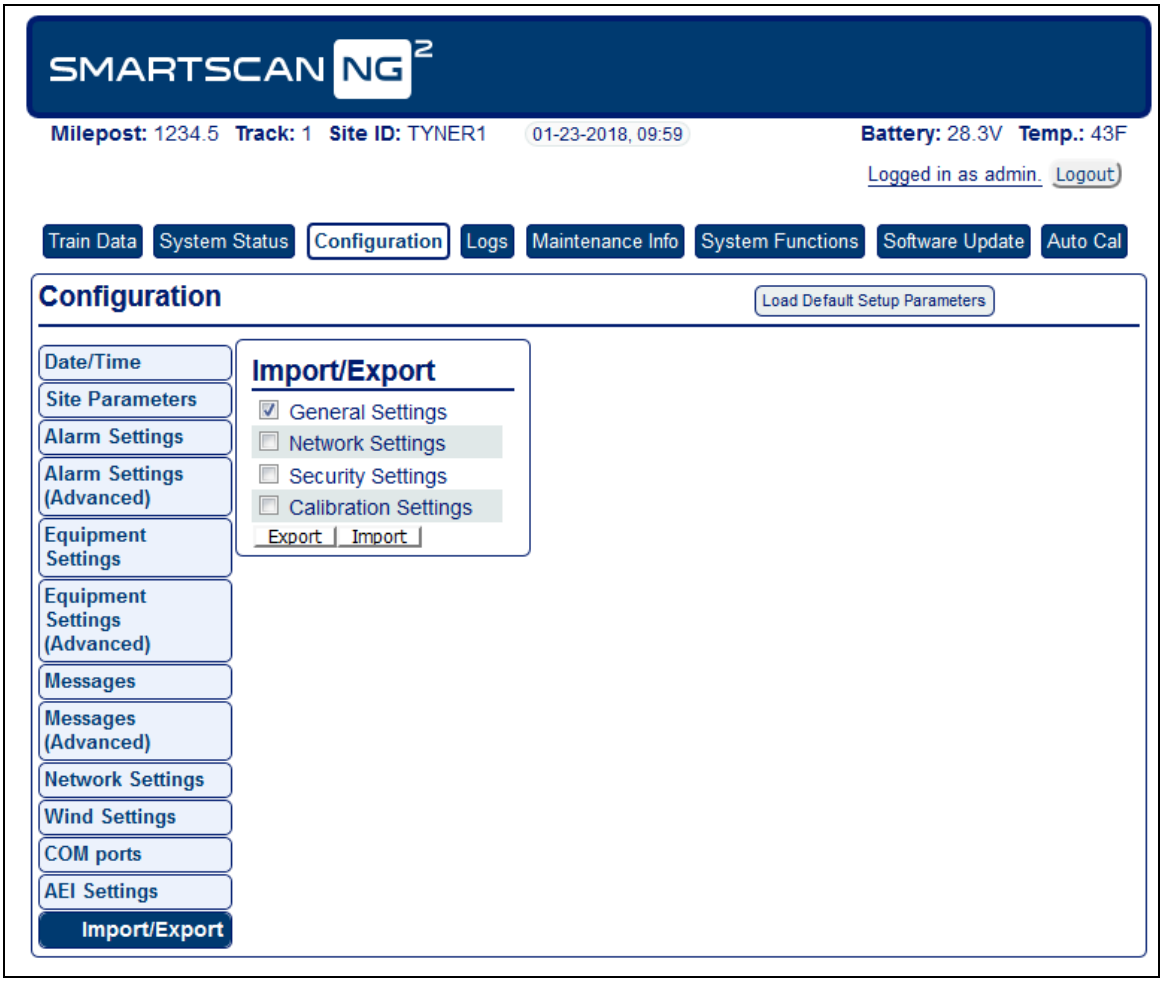

Import/Export

5.4 System Event Log

The **System Event Log** report is used for diagnostics. As certain system events occur, entries are posted into the event log. Each time an entry is made into this log, it receives an event number, the date and time that the event was recorded, and an event description. Events are listed in chronological order beginning with the most recent event.

To view the system event log, left-click the **Logs** tab. Grab and drag slider bar to view full report. See **System Event Log** sample depicted below.

Slider Bar

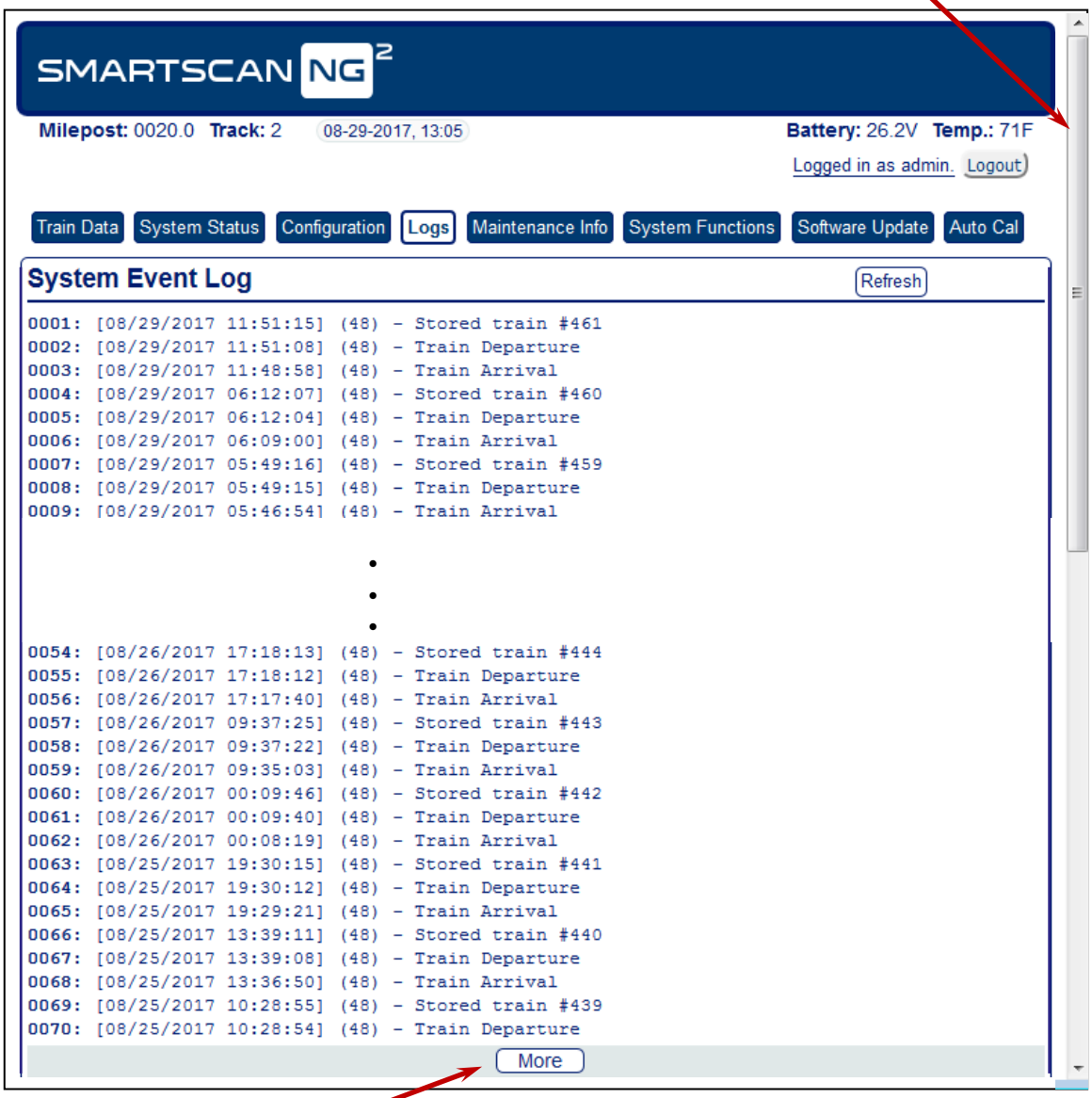

Click the "**More**" button at the bottom to load more events.

5.5 Maintenance Info

Left-click **Maintenance Info** tab to view maintenance data. Left-click the Change Train Range to change the range for maintenance calculations. The default range is the last forty trains.

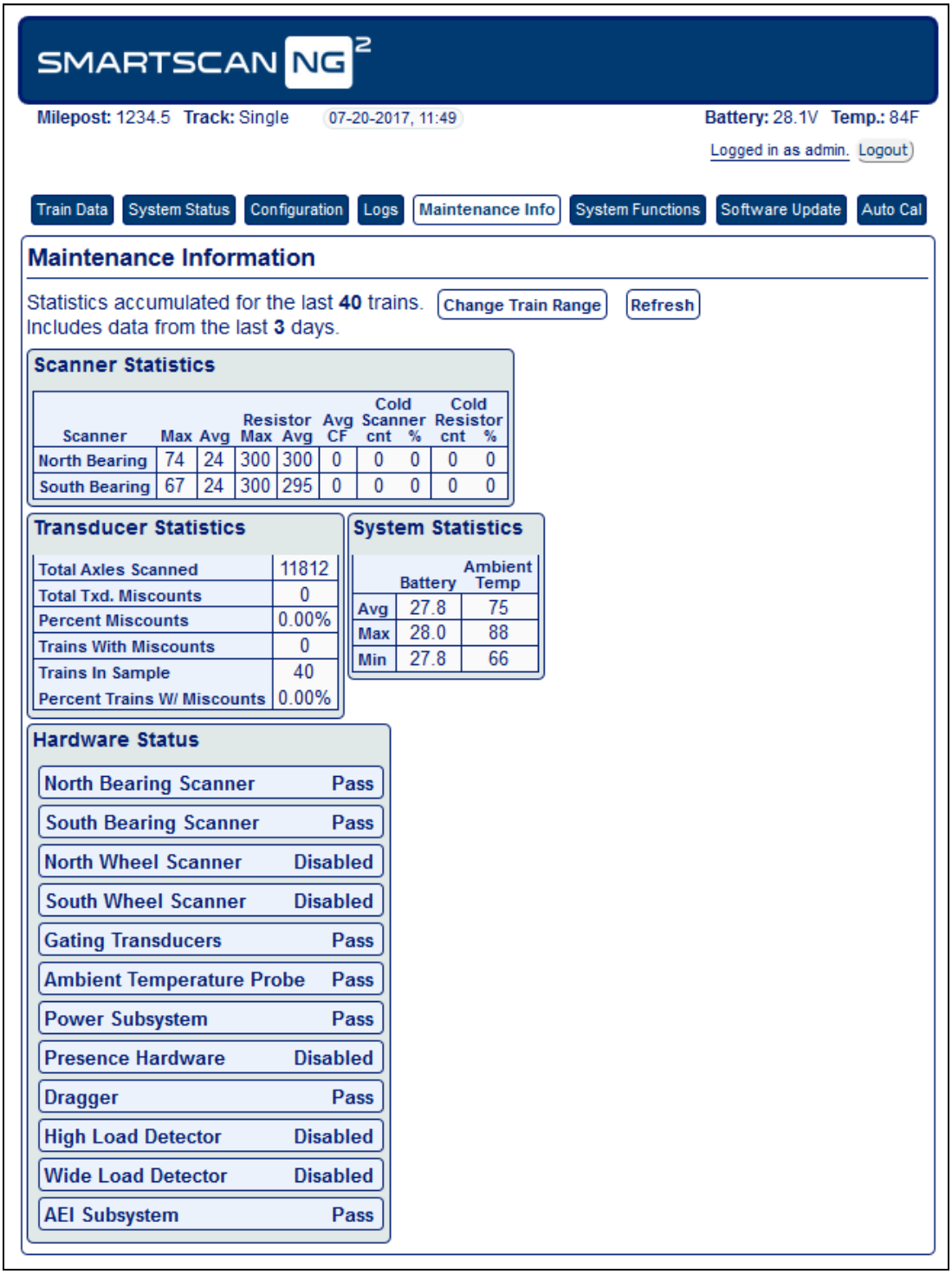

5.6 System Functions

Some but not all system functions can be accessed remotely. Left-click the **Systems Functions** tab to view available options. Left-click the corresponding button to initiate the desired function.

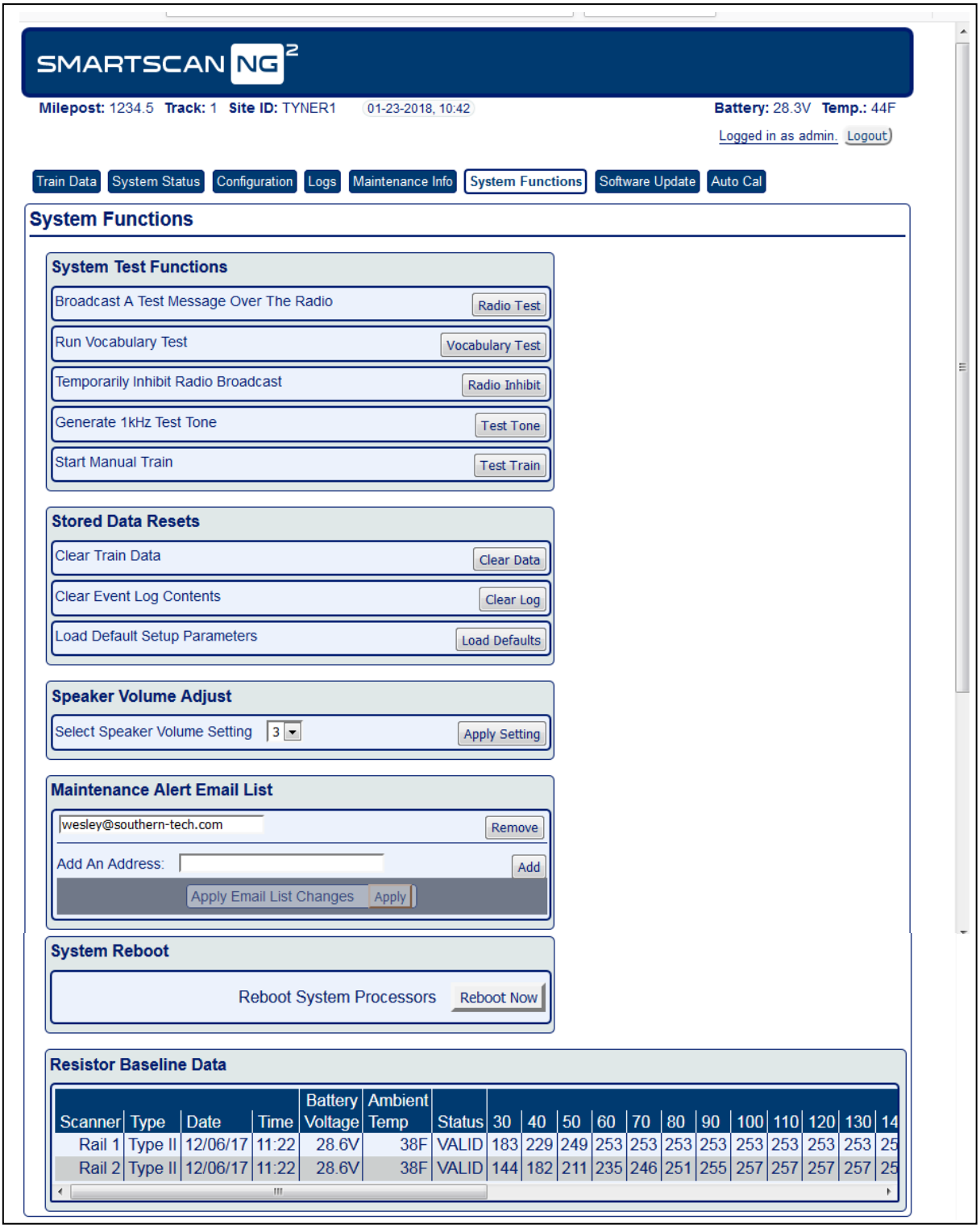

5.7 Software Update

To perform a remote software update, left-click the **Software Update** tab.

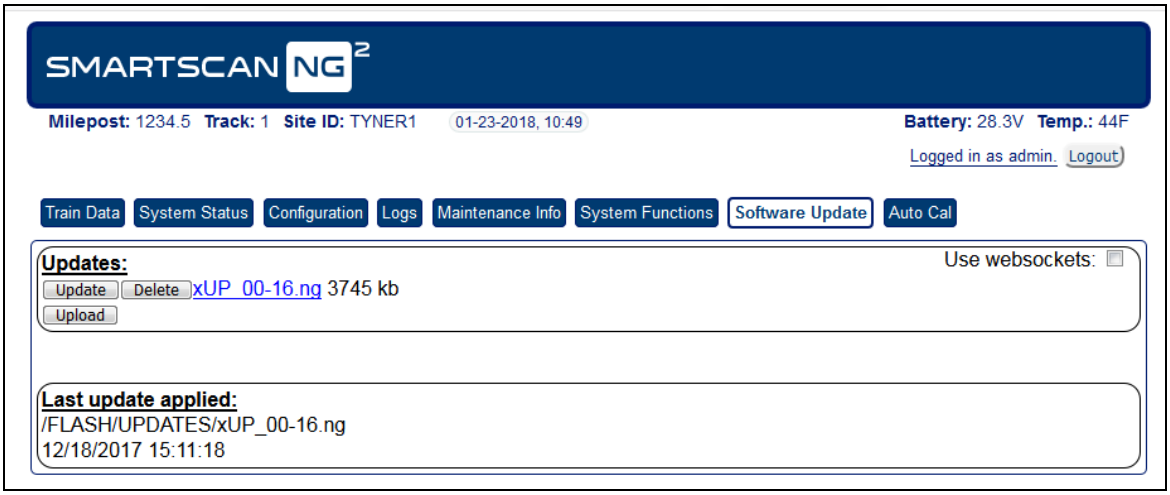

To upload a new file, left-click on the **Upload** button. Search for and select software file on your computer. Only two files can be stored at a time. If there are already two files, you must delete one before uploading another.

When upload is complete, left-click the **Update** button and follow the instructions in the prompts.

5.8 Auto Calibration

To perform the automatic scanner calibration function, left-click the **Auto Cal** tab.

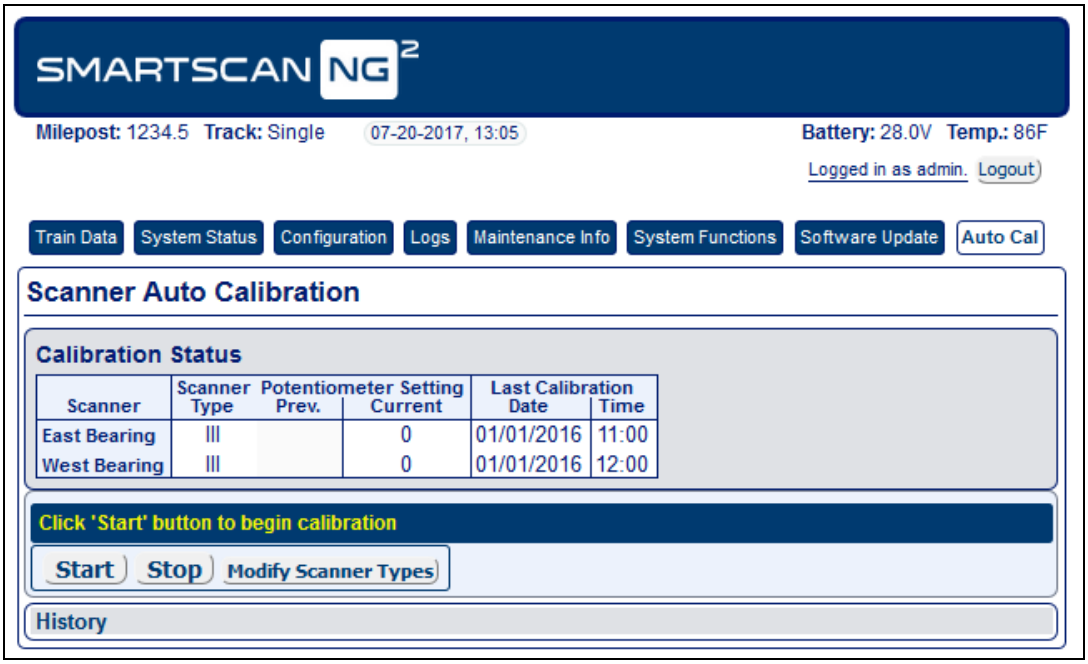

Left click the command buttons to **Start**/**Stop** calibration or **Modify Scanner Types**.

6.0 Producing Reports

The SmartScanNG² system provides:

- Train Summary report
- Train Detail report
- Exception Summary report
- extended Exception Detail report
- abbreviated Exception Detail report
- System Status report
- AEI Diagnostic Detail report
- Event Log report

This section shows a sample of each report with a description of each field. It also lists step-by-step instructions on producing each report on-site.

NOTE: The sample reports found in this document should not be interpreted as real-world conditions or activity. These examples are meant to illustrate the general appearance of a given report and provide a reference for the location of report data.

The instructions for each report start with you being at the Main menu, which is described below.

1 Plug your computer into the SmartScanNG² serial port COM1**Error! Bookmark not defined.**.

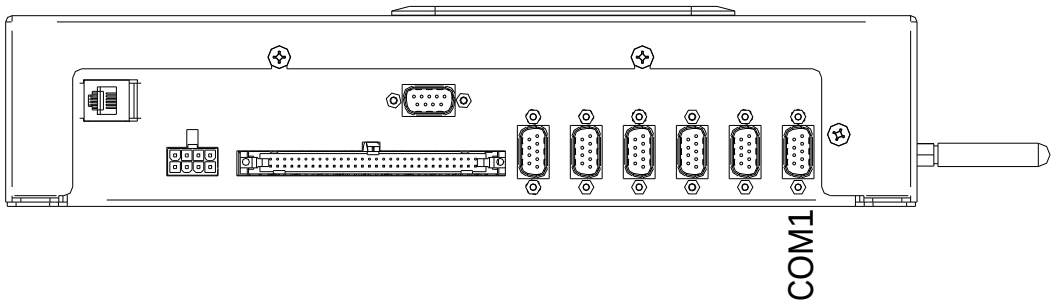

2 Turn on your computer.

3 Be sure that your computer has installed communications software and that it is set to use full duplex. The baud rate of your computer must match the baud rate of the selected serial port because they are in direct, one-to-one, communication with one another. The baud rate for COM1 was set to 19200 at the factory. If the customer changed this baud rate, your computer must be set to the changed value.

Use your communications software to open a LOG file and capture the whole session to the file. When your session is complete, you may then view what you have done with an editor, print it with a printer, or store it for later retrieval.

4 On your computer, open a LOG file.

5 Press **[Esc]**.

This prompt appears.

```
Enter password:
```

6 Type assigned password.

7 To get the serial interface to come up, press **[Esc]**.

The Main menu appears.

```
SmartSCAN NG2, MP/KP:1234.5, Track:Single
07/20/2017 13:24:49, 28.1V, 86°F
Main Menu - Comm
----------------------------------------
[A] - Train Summary
[B] - Train Detail
[C] - Exception Summary
[D] - Exception Detail
[E] - System Status Report
[F] - Last Train
[G] - Range of trains
[H] - Train DSRs
[I] - AEI Diagnostic
[J] - Setup
[K] - Event log
[L] - System Functions Menu
[M] - Replay train
[N] - Security Menu
[X] - Exit
```

At the above prompt, you can produce one of the listed reports selecting the appropriate option.

If a train is at the site when the Main menu is generated, "*** Train Is Present ***" is displayed just above the menu header for the Main menu.

8 When done, close the LOG file.

9 To exit the serial interface and return the system to normal operation, type **X**

6.1 Train Summary Report

The Train Summary report lists all trains currently stored in the Trains directory. A train number is shown for each train entry so that a Train Detail report may easily be produced for any train listed on the summary.

The report is divided into a header section and a detail section. The header section contains general information about the site. The detail section contains summary information on each train that passed the site.

The SmartScanNG² system calculates a checksum for each train. This checksum is stored with the train data. Later, when the system retrieves this data, it recalculates the checksum. If the two checksums don't match, the Train Summary report so states in the detail section. So, instead of a train record, a checksum-error line will be displayed.

Below is a sample of part of a Train Summary report. The contents of your report will be similar. The version information in the sample below is for illustrative purposes only.

```
==============================================================================
                        Southern Technologies Corporation
                         Next Generation Detector System
                                   TRAIN SUMMARY
==============================================================================
Software Version: UP_00-16 2017-07-06                           MP/KP: 1234.5
                                                                 Track: Single
                                                               Site ID: NONAME
Current Alarm Settings
Absolute...... 200   Carside Slope... 1.31
                     Minimum......... 155
Differential.. 115   Cold Rail Temp..  10
Hot Wheel..... 698

Total Trains: 100
-------------------------------------------------------------------------------------------------------------
                                                      D                Bearing     Bearing
                                 TxD Counts TxD Spikes i    Speed       Average     Maximum   AEI   Amb
Train#   Date   Time Cars Axles  TO1  TO2   TO1  TO2  r Min Max Xit  East  West  East  West Tags Temp  Bat
-------------------------------------------------------------------------------------------------------------
 266   07/19/17 22:20  55   454  454  454     0    0  N   6  26   5    29    29    53    57 112   74F 27.9v
 265AC 07/19/17 21:24  27   114  114  114     0    0  N  14  18  14    23    22    39    39  53   77F 27.9v
 264   07/19/17 16:40 134   544  544  544     0    0  N  27  35  26    17    17    45    48 186   87F 28.0v
 263   07/19/17 16:21 112   456  456  456     0    0  N  35  40  35    19    19    56    51 147   88F 27.9v
 262   07/19/17 11:40  27   112  112  112     0    0  N  48  48  48    23    24    52    59  52   83F 27.9v
 261S* 07/19/17 11:17  27   114  114  114     0    0  S  26  29  26     9     9    29    34  51   84F 27.9v
 260   07/19/17 10:21 138   560  560  560     0    0  S  28  40  28    20    21    49    48 193   80F 27.8v
 259   07/19/17 08:38  77   320  320  320     0    0  N  29  30  29    20    21    51    50 151   72F 27.8v
 258   07/19/17 07:25  48   334  334  334     0    0  N  43  49  45    24    24    48    50  93   67F 27.9v
B257I  07/19/17 04:21  39   266  266  266     0    0  N   9  20  20    28    26    63    55  78   69F 27.9v
 256   07/19/17 04:04  28   174  174  174     0    0  N   7  22   7    24    23    43    48  57   69F 27.9v
 255   07/19/17 03:34 136   552  552  552     0    0  N  12  48  12    19    19    48    51 181   69F 28.0v
 254   07/19/17 02:22  41   272  272  272     0    0  N  30  35  30    30    30    55    55  81   69F 28.0v
                 •
                 •
                 •

END OF REPORT - Press any key...
```

The table below lists the fields from the header section and the contents of each field.

Heading	Contents of Field
Software Version	The version number and its release date, which is in yyyy/mm/dd format. This firmware resides on the processor modules.
MP/KP	The five-digit milepost/kilometer post of the site. ***Section 4.0 - Serial Interface*** tells how to change this value using the MP/KP submenu.
Track	The track designator of the site. For single-track sites, the value is Single. For double-track sites, valid values are 1, 2, 3, 4, 5, and 6. ***Section 4.0 - Serial Interface*** tells how to set this value using the Track Number submenu of the Setup menu.
Current Alarm Settings	The alarm parameters currently defined in the system setup. These values were in place at the time this report was run. • The value after Absolute is set by the Absolute option on the Alarm Settings menu. • The value after Differential is set by the Differential option on the Alarm Settings menu. • The heading Hot Wheel only appears when the Hotwheel option on the Equipment Settings menu is enabled. The value after Hot Wheel is set by the Hotwheel option on the Alarm Settings menu. • The value after Carside Slope is set by the Carside Slope option on the Alarm Settings menu. • The value after Minimum is set by the Carside Minimum option on the Alarm Settings menu. • The value after Cold Rail Temp is set by the Cold Rail Temperature option on the Alarm Settings menu. ***Section 4.0 - Serial Interface*** tells how to set these values.
Total Trains	The total number of trains visiting the site since the Trains directory was last cleared.

The table below lists the fields from the **detail section** and the contents of each field.

Heading	Contents of Field
Train#	The number that identifies the train in the Trains directory.
Date	The date the train arrived at the site. Date is in mm/dd/yy format.
Time	The time the train arrived at the site. Time is in 24-hour hh:mm format, where 8 a.m. is 08:00, noon is 12:00, 8 p.m. is 20:00, and midnight is 00:00.
Cars	The total number of cars counted by the SmartScanNG² system.
Axles	The total number of axles counted by the SmartScanNG² system.
TO1	The total number of hits counted by gating transducer TO1. TO1 is the first gating transducer going north or east from the bearing scanner. It is the gating transducer closest to the bearing scanner.
TO2	The total number of hits counted by gating transducer TO2. TO2 is the second gating transducer going north or east from the bearing scanner. It is the gating transducer farthest from the bearing scanner.
TxD Spikes	Under this heading are two columns, one for each gating transducer, containing the number of spikes detected by the gating transducers. (Note: Spikes are ignored for a train's first thirty-six axles and for all subsequent six-axle vehicles.)
Dir	The direction the train was traveling. Valid values are N, S, E, and W.
Speed (mph)	The train's minimum, maximum, and exit speed in miles per hour.
Bearing Average	Under this heading are two columns, one for each bearing scanner, containing the average temperature read by the bearing scanners. If the track orientation is east and west, the bearing scanners are labeled north and south. If the track orientation is north and south, they are labeled east and west.
Bearing Maximum	Under this heading are two columns, one for each bearing scanner, containing the maximum temperature read by the bearing scanners. If the track orientation is east and west, the bearing scanners are labeled north and south. If the track orientation is north and south, they are labeled east and west.
Wheel Average	Under this heading are two columns, one for each wheel scanner, containing the average temperature read by the wheel scanners. If the track orientation is east and west, the wheel scanners are labeled north and south. If the track orientation is north and south, they are labeled east and west. This field appears **only** when the Hotwheel option on the Equipment Settings menu is enabled.
Wheel Maximum	Under this heading are two columns, one for each wheel scanner, containing the maximum temperature read by the wheel scanners. If the track orientation is east and west, the wheel scanners are labeled north and south. If the track orientation is north and south, they are labeled east and west. This field appears **only** when the Hotwheel option on the Equipment Settings menu is enabled.
AEI Tags	The total number of AEI tags stored. The number of tag pairs found plus those single tags that lack a match. This heading only appears if the AEI subsystem is enabled using the AEI option on the Equipment Settings menu.
Amb Temp	The ambient temperature, in degrees Fahrenheit, at the time the train arrived at the site.
Bat	The system battery voltage at the time the train passed the site.

The Train Summary report contains three unlabeled columns that may contain one-character status codes. In the Train Summary excerpt below, these columns have been highlighted and labeled. Following the Train Summary excerpt is a brief explanation of each column along with a table containing possible values for that column.

A B C

Train#	Date	Time	Cars	Axles	TxD Counts TO1	TxD Counts TO2	TxD Spikes TO1	TxD Spikes TO2	Dir	Speed Min	Speed Max	Xit	Bearing Average East	Bearing Average West	Bearing Maximum East	Bearing Maximum West	AEI Tags	Amb Temp	Bat
266	07/19/17	22:20	55	454	454	454	0	0	N	6	26	5	29	29	53	57	112	74F	27.9v
265AC	07/19/17	21:24	27	114	114	114	0	0	N	14	18	14	23	22	39	39	53	77F	27.9v
264	07/19/17	16:40	134	544	544	544	0	0	N	27	35	26	17	17	45	48	186	87F	28.0v
263	07/19/17	16:21	112	456	456	456	0	0	N	35	40	35	19	19	56	51	147	88F	27.9v
262	07/19/17	11:40	27	112	112	112	0	0	N	48	48	48	23	24	52	59	52	83F	27.9v
261S*	07/19/17	11:17	27	114	114	114	0	0	S	26	29	26	9	9	29	34	51	84F	27.9v
260	07/19/17	10:21	138	560	560	560	0	0	S	28	40	28	20	21	49	48	193	80F	27.8v
259	07/19/17	08:38	77	320	320	320	0	0	N	29	30	29	20	21	51	50	151	72F	27.8v
258	07/19/17	07:25	48	334	334	334	0	0	N	43	49	45	24	24	48	50	93	67F	27.9v
B257I	07/19/17	04:21	39	266	266	266	0	0	N	9	20	20	28	26	63	55	78	69F	27.9v
	⋮																		

(**Column A**) - Below are the characters that can be printed in the DSR status column of the Train Summary report. This column appears just before the Train# column.

Character	Definition
(blank)	There were no DSR records captured for this train
B	DSR records for bearing scanners were captured for this train.
W	DSR records for wheel scanners were captured for this train.
+	DSR records for bearing and wheel scanners were captured for this train.

(**Column B**) - Below are the characters that can be printed in the Alarm status column of the Train Summary report. This column appears just after the Train# column and right before the Correction Factor column.

Character	Definition
(blank)	The train did not contain any exception alarms, integrity failures, or system alarms.
A	The train contained exception alarms but no integrity failures.
I	The train contained integrity failures but no exception alarms.
B	The train contained exception alarms and integrity failures.
S	The train did not contain any exception alarms or integrity failures, but did contain system alarms.
T	The train was a test train.

(**Column C**) - Below are the characters that can be printed in the Correction Factor (CF) status column of the Train Summary report. This column appears just after the Alarm status column and right before the date column.

Character	Definition
(blank)	Resistor test passed.
C	The train had one or more correction factors greater than 25%.
*	The resistor test results were overridden for one or more scanners.

To produce a Train Summary report:

1 Using the serial interface, display the Main menu.

Section 4.0 - Serial Interface tells how to display the Main menu. The Main menu looks like this.

```
SmartSCAN NG2, MP/KP:1234.5, Track:Single
07/20/2017 15:16:36, 27.9V, 87°F
Main Menu - Comm
----------------------------------------
[A] - Train Summary
[B] - Train Detail
[C] - Exception Summary
          .
          .
          .
```

2 Select **Train Summary**.

The last line of the report reads: "END OF REPORT - Press any key..."

3 To return to the Main menu, press any key.

At this time, you can produce another report by selecting the appropriate option.

4 When done, close the LOG file.

5 To exit the serial interface and return the SmartScanNG² system to normal operation, type **X**

6.2 Train Detail Report

The Train Detail report provides detailed information on a single train. When choosing this report, you'll be prompted for a train number. When prompted, enter a train number from the Train Summary report. The train number appears under the column titled "Train#" in the detail section of the Train Summary report.

Where wheel scanners are properly installed, wheel temperatures are always recorded, even if the Hotwheel option is disabled. On the other hand, if the AEI option is disabled during train passage, no AEI information is recorded. If the Carside Slope option is disabled during train passage, no Carside Slope alarms are generated. But, if it is enabled at the time a report is requested, a carside-slope alarm-limit line is generated for each car of the train.

Carside Slope alarm detection is enabled/disabled using the Carside Slope option on the Equipment Settings menu. Hotwheel alarm reporting is enabled/disabled using the Hotwheel option on the Equipment Settings menu. The AEI subsystem is enabled/disabled using the AEI option on the Equipment Settings menu.

When printing an extended, not abbreviated, version of a Train Detail report, a copy of the current system parameters appears at the end of the report. This appended information is almost a complete copy of the System Status report.

Below is a sample of part of a Train Detail report, in this example both the AEI option and the Hotwheel option on the Equipment Settings menu were enabled at the time the report was requested. The Carside Slope option on the Equipment Settings menu was disabled. Also, both the AEI and Hotwheel options were enabled while the specified train was passing the site. The contents of your report will be different. The version information in the sample below is for illustrative purposes only.

```
================================================================================
                        Southern Technologies Corporation
                         Next Generation Detector System
                                  TRAIN DETAIL
================================================================================
 Train#: 412               Axles: 422         Speed               MP/KP: 0020.0
   Date: 08/22/17           Cars: 104         Min: 39             Track: 2
   Time: 11:30         Direction: West        Max: 41       Temperature:  +71F
Site ID:           Shutters Open: 105         Avg: 39           Battery: 26.1v
                          Length: 5589       Exit: 39
================================================================================
                    Resistor             Transducer
Scanner    Max Avg Read Req  CF        Count Spikes    Alarm        Limit  Carside Parms
--------------------------------   ----------------    ------------------  -------------
North Brng  45  14  300 283B   0   TO1:  422      0    Absolute       200  Slope:   1.31
South Brng  42  15  300 284B   0   TO2:  422      0    Differential   115  Minimum:  155
North Whl   32   2  285 280B   0                       Hot Wheel      698
South Whl   31   1  292 278B   0                       Cold Rail Temp  10
Resistor Test Mode: Enabled
Cold Rail Test: All trains
================================================================================
Software Version: UP_00-16 2017-07-11
================================================================================
AEI System Data

Tags Read          Tags Stored: 204
--------------
Antenna 0: 103
Antenna 1: 101

--------------------------------------------------------------------------------
System Alarms

 None

--------------------------------------------------------------------------------
Integrity Failures

 None

--------------------------------------------------------------------------------
Axle Alarm Summary

 None

--------------------------------------------------------------------------------
                              .
                              .
                              .
(continued on next page)
```

```
                                  .
                                  .
                                  .
-------------------------------------------------------------------------------
Announcements made

" U P Detector Milepost 2 0 Point 0 Track 2 "
" U P Detector Milepost 2 0 Point 0 Track 2 No Defects Detector Out "

-------------------------------------------------------------------------------
             Rail       Wheel
 Car Axle North South North South   ON  OFF PW1 PW2  Alarms
-------------------------------------------------------------------------------
   1    1    3     1    20    31    52    0  18  18  UPRR   5359
        2    1     0     0     0    52  121  21  21
        3    0     0     0     0    52  119  19  19
        4    0     0     0     0    51  812  18  17
        5    1     0     0     0    51  121  21  20
        6    0     0     0    16    51  119  19  18

   2    7    2     1    28    28    51  315  21  20  CSXT   9034
        8    0     0     0     0    51  130  21  20
        9    0     0     0     0    51  120  20  20
       10    1     0     0     0    51  722  20  20
       11    1     0    16     0    51  127  16  16
       12    2     0    24    28    51  121  19  18

   3   13    0     0     0     0    51  306  15  15  CSXT    899
       14    2     0    31    28    51  119  18  18
       15    1     0    28    20    51  118  18  18
       16    0     0     0     0    50  800  18  18
       17    3     1    31    31    51  117  16  16
       18    0     0     0     0    51  118  17  17

   4   19   23     0     0     0    50  445  16  16  ETTX 853846
       20   24     0     0     0    50   83  15  15
       21   24     0    28    16    50 1445  18  17
       22   11     1    31    28    50   82  18  17

   5   23   11     0     0     0    50  581  17  17  ETTX 908330
       24   16     0     0     0    50   77  16  16
       25   14     0     0     0    49 1426  17  17
       26   24     0     0     0    49   76  19  18

   6   27   21     0     0     0    49  575  16  16  ETTX 802471
       28   24     0     0     0    49   81  17  16
       29   23     0     0     0    48 1400  17  17
       30   14     0     0     0    48   80  17  17

   7   31   23     0     0     0    48  533  16  16  ETTX 702465
       32   23     0     0     0    48   78  14  15
       33   19     0     0     0    48 1429  17  17
       34   20     0     0     0    48   78  17  17

                                  .
                                  .
                                  .
```

The Train Detail report is divided into three sections. The header section contains general information about the site (like the MP/KP) and some detail information about the specific train (like the train's exit speed) that passed the site. The detail section contains more detailed information (like the bearing and wheel temperatures) about the specific train. In between these two sections is the system-events section, which contains all System Alarms and Exception Alarms associated with the train.

The table below lists the fields from the header section and the contents of each field.

Heading	Contents of Field
Train#	The number that identifies the train in the Trains directory.
Date	The date the train arrived at the site. Date is in mm/dd/yy format. ***Section***
Time	The time the train arrived at the site. Time is in 24-hour hh:mm format, where 8 a.m. is 08:00, noon is 12:00, 8 p.m. is 20:00, and midnight is 00:00.
Site ID	The unique site identification.
Axles	The total number of axles counted by the SmartScanNG² system.
Cars	The total number of cars counted by the SmartScanNG² system.
Direction	The direction the train was traveling. Valid values are North, South, East, and West.
Shutters Open	The number of seconds it took the train to pass over the site.
Length	The length of train in feet.
Speed	The train's minimum, maximum, average, and exit speeds in miles per hour.
MP/KP	The five-digit milepost/kilometer post of the site. ***Section 4.0 - Serial Interface*** tells how to change this value using the MP/KP submenu of the Setup menu.
Track	The track designator of the site. For single-track sites, the value is Single. For double-track sites, valid values are 1, 2. 3, 4, 5, and 6. ***Section 4.0-Serial Interface*** tells how to set this value using the Track Number submenu of the Setup menu.
Temperature	The ambient temperature at the time the train arrived at the site. Temperature is in degrees Fahrenheit.
Battery	The system battery voltage at the time the train passed the site.
Scanner	Location of the bearing and wheel scanners. If the track orientation is east and west, the scanners are labeled north and south. If the track orientation is north and south, they are labeled east and west. The wheel scanner field only appears when Hotwheel alarm reporting is enabled using the Hotwheel option on the Equipment Settings menu.
Max	The maximum temperature, above the ambient temperature in degrees Fahrenheit, recorded by a scanner.
Avg	The average temperature, above the ambient temperature in degrees Fahrenheit, calculated from all recorded temperatures from a scanner

Heading	Contents of Field
Resistor Read	The scanner resistor temperature (read after train passage), in degrees Fahrenheit, recorded by the bearing scanner on a given railside.
Resistor Req	The resistor temperature, in degrees Fahrenheit, required by the scanner on a given railside to avoid a Cold Resistor alarm. This value was calculated using the amount of time the shutters were open and the Resistor Test Mode option in effect at the time the train exits the site. If the Resistor Test Mode option is disabled, a zero appears in this field.
	One of five uppercase letters follows the Resistor Req temperature. **B** The baseline resistor integrity test method was used for this train. **D** The resistor integrity test (that is, the Resistor Test Mode option) was disabled by the user. **I** The interim resistor integrity test method was used for this train. **T** For this train, the shutters were open for less than 30 seconds. **V** For this train, the battery voltage (measured with the shutters open) was less than 12.6 volts (12V system) and 22 volts (24V system). For **D**, **T**, and **V**, the required resistor heat is set to zero (that is, a zero appears in the Resistor Read field). A **T** or **V** indicates that the integrity test was not performed due to low voltage or insufficient shutter open time, which could result in an invalid resistor integrity test if it was performed.
CF	The percentage difference between the required resistor value and the value that was actually read. For example, if the required resistor temperature is 180 and the actual resistor temperature is 135 the correction factor would be 25% (1 - (135 / 180) = .25), and 25 would appear in this field.
Txdr Counts	The gating transducer designator (either TO1 or TO2) followed by the total number of hits on that transducer.
Txdr Spikes	The total number of spikes filtered from TO1 or TO2.
Alarm Limit	The Hotbox alarm levels for Absolute and Differential; Hotwheel alarm level; and the Cold Rail Temperature offset. These values were in place at the time the train arrived at the site. • The value after Absolute is set by the Absolute option on the Alarm Settings menu. • The value after Differential is set by the Differential option on the Alarm Settings menu. • The value after Hot Wheel is set by the Hotwheel option on the Alarm Settings menu. • The value after Cold Rail Temp is set by the Cold Rail Temperature option on the Alarm Settings menu. ***Section 4.0 - Serial Interface*** tells how to set these values.

Heading	Contents of Field
Carside Parms	The Carside Slope alarm parameter values that were in place at the time the train arrived at the site. • The value after Carside Slope is set by the Carside Slope option on the Alarm Settings menu. • The value after Minimum is set by the Carside Minimum option on the Alarm Settings menu. ***Section 4.0 - Serial Interface*** tells how to set these values.
Resistor Test Mode	The status of the post-train resistor integrity test at the time the train arrived at the site. Valid values (aka modes) are Enabled, Reduced, and Disabled. ***Section 4.0 - Serial Interface*** tells how to set this value using the Resistor Test Mode option on the Equipment Settings menu.
Cold Rail Test	Displays current setting of either “All Trains” or “Long Trains Only”.
Software Version	The version numbers of the firmware and their release dates, which are in yyy/mm/dd format. This firmware resides on the processor modules.
AEI System Data	The number of AEI tags read (by antenna0 and antenna1) and the total number of tags stored for the train. Where both tags of a tag pair are operational, each antenna will read one tag of the pair. The total number of tags stored represents the number of tag pairs found plus those single tags that lack a match. This heading and the columns under it appear only when the AEI subsystem is enabled using the AEI option on the Equipment Settings menu.

The table below lists the fields from the system-events section and the contents of each field.

Heading	Contents of Field
System Alarms	Lists any System Alarms detected at the time the train passed the site. If none were detected, this header is followed by the word "none." ***Appendix A - System Alarms*** describes the conditions and events that the system flags as System Alarms.
Integrity Failures	Lists any Integrity Failures detected at the time the train passed the site. If none were detected, this header is followed by the word "none." **Appendix B - Integrity Failures** describes the conditions and events that the system flags as Integrity Failures.
Axle Alarm Summary	Lists each Exception Alarm found on the train and the axle on which it was found. If none were found, this header is followed by the word "none."
Announcements Made	Lists the announcements transmitted on the designated radio frequency.

The table below lists the fields from the detail section and the contents of each field.

Heading	Contents of Field
(Unlabeled)	The leftmost column (unlabeled) can contain B, P, W, + (plus sign),or nothing. If "B," at least one bearing was found on the axle that was warmer than the value set by the Bearing DSR Capture Temp option on the Alarm Settings menu. If "P," noise on a pyrometer input (from at least one scanner) was detected and filtered while the axle was passing the site. If "W," at least one wheel was found on the axle that was warmer than the value set by the Wheel DSR Capture Temp option on the Alarm Settings menu. If "+," more than one problem was detected (that is, some combination of B, P, and W was detected). If blank, no warm bearing, warm wheel, or pyrometer noise was detected.
Car	The car number as determined by the firmware.
Axle	The axle number.
Rail	Under this heading are two columns, one for each bearing scanner, containing the temperature read by the bearing scanners. If the track orientation is east and west, the bearing scanners are labeled north and south. If the track orientation is north and south, they are labeled east and west.
Wheel	Under this heading are two columns, one for each wheel scanner, containing the temperature read by the wheel scanners. If the track orientation is east and west, the wheel scanners are labeled north and south. If the track orientation is north and south, they are labeled east and west. This heading and the two columns under it appear only when the Hotwheel option on the Equipment Settings menu is enabled.
ON	The number of milliseconds an axle was between the gating transducers.
OFF	The number of milliseconds between axles (when no axle was between the gating transducers).
PW1	The recorded width of the pulse generated by gating transducer TO1. Slower trains generate wider pulse widths than faster moving trains.
PW2	The recorded width of the pulse generated by gating transducer TO2. Slower trains generate wider pulse widths than faster moving trains.
Alarms	Any Exception Alarm found on the given axle.

To produce a Train Detail report:

1 Using the serial interface, display the Main menu.

Section 4.0 - Serial Interface tells how to display the Main menu. The Main menu looks like this.

```
SmartSCAN NG2, MP/KP:1234.5, Track:Single
07/25/2017 13:42:42, 28.1V, 86°F
Main Menu – Comm
----------------------------
[A] - Train Summary
[B] - Train Detail
[C] - Exception Summary
[D] - Exception Detail
[E] - System Status Report
          .
          .
          .
```

2 Select **Train Detail**.

This prompt appears.

```
Enter Train Number:
```

3 Type the train number.

If the train number of the train you wish to print is fewer than four digits, press [Enter] after typing the digits.

If you enter a an invalid train number, the system prints “Train Not Found”, and the main menu reappears.

4 The Main menu reappears after a report is produced.

At this time, you can produce another report by selecting the appropriate option.

5 When done, close the LOG file.

6 To exit the serial interface and return the SmartScanNG² system to normal operation, type **X**

6.3 Exception Summary Report

The Exception Summary report lists all trains currently stored in the Exceptions directory. (A train is stored in the Exceptions directory if either an Exception Alarm or an Integrity Failure was detected on it as it passed the site.) A train number is shown for each train entry so that an Exception Detail report may easily be produced for any train listed on the summary.

The report is divided into a header section and a detail section. The header section contains general information about the site. The detail section contains summary information on each exception train recorded by the system.

Below is a sample of part of an Exception Summary report. The contents of your report will be similar. The version information in the sample below is for illustrative purposes only.

```
==============================================================================
                        Southern Technologies Corporation
                         Next Generation Detector System
                                EXCEPTION SUMMARY
==============================================================================
Software Version: UP_00-16 2017-08-10                           MP/KP: 0159.1
                                                                 Track: 1
                                                               Site ID: NONAME
Current Alarm Settings
Absolute...... 205   Carside Slope... 1.31
                     Minimum......... 155
Differential.. 115   Cold Rail Temp..  10
Hot Wheel..... 698

Total Trains: 8
-----------------------------------------------------
                                 D
                                 i    Speed
Train# Ref#   Date   Time  Axles r Min Max Xit Alarms
-----------------------------------------------------
B 12    149 08/20/17 08:39    63 N   7  17  17 East Rail Absolute
B 11    148 08/20/17 08:26   236 S   7  22   5 East Rail Hot Wheel

B 10    119 08/19/17 00:09   302 N   6  23   7 West Rail Differential

B  9S   117 08/18/17 21:37   456 N   4  33  13

B  8    103 08/15/17 21:16    42 N   4  15  16 Dragging Equipment
B  7    102 08/15/17 20:58   234 N   3  20   3 Dragging Equipment

B  6     64 08/14/17 06:35    16 S   0   3   3 East Rail Hot Wheel
                                                West Rail Hot Wheel
B  5S    63 08/14/17 06:31   344 S   9  39   4
```

The table below lists the fields from the header section and the contents of each field.

Heading	Contents of Field
Software Version	The version numbers of the firmware and their release dates, which are in yyyy/mm/dd format. This firmware resides on the processor modules.
MP/KP	The five-digit milepost/kilometer post of the site. ***Section 4.0 - Serial Interface*** tells how to change this value using the MP/KP submenu.
Track	The track designator of the site. ***Section 4.0 - Serial Interface*** tells how to set this value using the Track Number submenu of the Setup menu.
SiteID	The name of the site. This can be supplied either by the Harriman Dispatch Center via the Polling System or by the Site ID option on the Polling System submenu. The default is NONAME.
Current Alarm Settings	The alarm parameters currently defined in the system setup. These values were in place at the time this report was run. • The value after Absolute is set by the Absolute option on the Alarm Settings menu. • The value after Differential is set by the Differential option on the Alarm Settings menu. • The heading Hot Wheel only appears when the Hotwheel option on the Equipment Settings menu is enabled. The value after Hot Wheel is set by the Hotwheel option on the Alarm Settings menu. • The value after Carside Slope is set by the Carside Slope option on the Alarm Settings menu. • The value after Minimum is set by the Carside Minimum option on the Alarm Settings menu. • The value after Cold Rail Temp is set by the Cold Rail Temperature option on the Alarm Settings menu. ***Section 4.0 - Serial Interface*** tells how to set these values.
Total Trains	The total number of trains visiting the site since the Trains directory was last cleared.

The table below lists the fields from the detail section and the contents of each field.

Heading	Contents of Field
	The leftmost column (unlabeled) can contain A, B, I, S, or nothing. If "A," an Exception Alarm was detected on the train. If "I," an Integrity Failure was detected. If "B," both an Exception Alarm and an Integrity Failure were detected. If "S," a System Alarm was detected, but Exception Alarms and Integrity Failures weren't. If blank, no Exception Alarm, Integrity Failure, or System Alarm was detected.
Train#	The number that identifies the train in the Exceptions directory.
Ref#	The number that identifies the train in the Trains directory.
Date	The date the train arrived at the site. Date is in **mm/dd/yy** format.
Time	The time the train arrived at the site. Time is in 24-hour **hh:mm** format, where 8 a.m. is 08:00, noon is 12:00, 8 p.m. is 20:00, and midnight is 00:00.
Axles	The total number of axles counted by the SmartScanNG².
Speed (mph)	The train's exit speed in miles per hour.
Dir	The direction the train was traveling. Valid values are N, S, E, and W.
Alarms	A description of the alarms that were detected for the current train.

To produce an Exception Summary report:

1 Using the serial interface, display the Main menu.

Section 4.0 - Serial Interface tells how to display the Main menu. The Main menu looks like this.

```
SmartSCAN NG2
07/21/2017 15:47:49 EST
Main Menu - Comm
----------------------------
[A] - Train Summary
[B] - Train Detail
[C] - Exception Summary
[D] - Exception Detail
[E] - System Status Report
            .
            .
            .
```

2 Select the **Exception Summary** report.

The main menu will reappear when the report is complete.

At this time, you can produce another report by selecting appropriate option.

3 When done, close the LOG file.

4 To exit the serial interface and return the SmartScanNG² system to normal operation, type **X**

6.4 Exception Detail Report

The Exception Detail report provides detailed information on a single train. When choosing this report, you'll be prompted for a train number. When prompted, enter a train number from the Exception Summary report. The train number appears under the column titled "Train#" in the detail section of the Exception Summary report.

Where wheel scanners are properly installed, wheel temperatures are always recorded, even if the Hotwheel option is disabled. On the other hand, if the AEI option is disabled during train passage, no AEI information is recorded. If the Carside Slope option is disabled during train passage, no Carside Slope alarms are generated. But, if it is enabled at the time a report is requested, a carside-slope alarm-limit line is generated for each car of the train.

Carside Slope alarm detection, hotwheel alarm detection, and the AEI subsystem are enabled/disabled using the Carside Slope, Hotwheel , and AEI options, respectively, on the Equipment Settings menu.

The Exception Detail Report can be printed in either extended or abbreviated format. The abbreviated report option is defined in the subsequent section. When printing an extended, not abbreviated, version of an Exception Detail report, a copy of the current system parameters appears at the end of the report. This appended information is almost a complete copy of the System Status report.

Below is a sample of part of an Exception Detail report when both the AEI option and Hotwheel option were enabled at the time the report was requested. The Carside Slope option was disabled. The contents of your report will be similar.

```
   ==============================================================================
                          Southern Technologies Corporation
                           Next Generation Detector System
                                  EXCEPTION DETAIL
==============================================================================
   Except#: 6                 Axles: 98          Speed               MP/KP: 1234.5
      Date: 08/22/17           Cars: 21          Min: 50             Track: Single
      Time: 17:05         Direction: South       Max: 50       Temperature:  +50F
   Site ID: NONAME    Shutters Open: 39          Avg: 50           Battery: 26.2v
                            Length: 2011       Exit: 50
   ==============================================================================
                       Resistor             Transducer
   Scanner    Max Avg Read Req  CF        Count Spikes    Alarm        Limit  Carside Parms
   --------------------------------   ----------------    ------------------  -------------
   East  Brng  45  36  300 283B   0   TO1:   98      0    Absolute       200  Slope:   1.31
   West  Brng 206  38  300 284B   0   TO2:   98      0    Differential   115  Minimum:  155
   North Whl   32   2  285 280B   0                       Hot Wheel      698
   South Whl   31   1  292 278B   0                       Cold Rail Temp  10
   Resistor Test Mode: Enabled
   Cold Rail Test: All trains
   ==============================================================================
   Software Version: UP_00-16 2017-08-16
   ==============================================================================
   AEI System Data

   Tags Read          Tags Stored: 39
   --------------
   Antenna 0: 20
   Antenna 1: 19

   ------------------------------------------------------------------------------
   System Alarms

    None

   ------------------------------------------------------------------------------
   Integrity Failures

    None

   ------------------------------------------------------------------------------
   Axle Alarm Summary

     26 West Rail Absolute
                                          .
                                          .
                                          .

   (continued on next page)
```

```
                                        .
                                        .
                                        .
   ------------------------------------------------------------------------------
   Announcements made

   " U P Detector Milepost 1 2 3 4 Point 5 "
   " <TONE> Defect Detected "
   " U P Detector Milepost 1 2 3 4 Point 5 First Hot Box West Rail Axle 2 6 From Head Of Train "
   " U P Detector Milepost 1 2 3 4 Point 5 First Hot Box West Rail Axle 2 6 From Head Of Train
Detector Out "

   ---------------------------------------------------------------------
                Rail       Wheel
    Car Axle  East  West  East  West  ON  OFF PW1 PW2  Alarms
   ---------------------------------------------------------------------
   W  1    1    35    37  27  997  13  12
           2    35    37  27   74  13  13
           3    35    37  27   64  13  13
           4    35    37  27  683  13  12
           5    35    37  27   64  13  13
           6    35    37  27   63  13  13

      2    7    36    37  27  193  13  13 NS     9892
           8    34    37  27   74  13  12
           9    35    37  27   64  13  13
          10    35    37  27  683  13  13
          11    35    37  27   64  13  13
          12    34    37  27   64  13  13

      3   13    34    37  27  192  13  13 NS     8972
          14    35    37  27   74  13  13
          15    35    38  26   64  13  13
          16    35    37  27  683  13  12
          17    34    37  27   64  13  13
          18    35    37  27   63  13  13

      4   19    35    37  27  192  13  13 FEC    4404
          20    35    37  27   75  13  13
          21    35    37  27  683  13  13
          22    35    37  27   64  13  13

      5   23    35    37  27  192  13  13 TTEX 353850
          24    35    37  27   75  13  13
          25    34    37  27  683  13  12
   B      26    35   206  27   63  13  13 West Rail Absolute

      6   27    34    37  27  192  13  13 CRLE   5123
          28    34    37  27   75  13  13
          29    35    37  27  683  13  12
          30    36    37  27   63  13  13

      7   31    36    37  27  193  13  13 TTAX 653662
          32    35    37  27   75  13  13
          33    35    37  27  683  13  12
          34    35    37  27   63  13  13

      8   35    34    36  27  193  13  13 TTAX 653843
          36    35    36  27   75  13  13
          37    35    37  27  683  13  12
          38    35    37  27   63  13  13
                                        .
                                        .
                                        .
```

The extended Exception Detail report is divided into three sections. The header section contains general information about the site (like the MP/KP) and some detail information about the specific train (like the train's exit speed) that passed the site. The system-events section, which contains all System Alarms and Exception Alarms associated with the train. Lastly, the detail section contains more detailed information (like bearing and wheel temperatures) about the specific train.

The SmartScanNG² system calculates a checksum for each train. This checksum is stored with the train data. Later, when the system retrieves this data, it recalculates the checksum. If the two checksums don't match, the extended Exception Detail report so states (as shown below).

The Header section of the Exception Detail report contains the field **Except#**. This number identifies the train in the Exceptions directory. It also identifies the train as represented in the Exception Summary report. The remainder of the fields on this report, in the report header, in the system-events section, and in the details section, are all identical to those found in the regular Train Detail Report. Reference section 6.2 Train Detail Report of this manual for definitions of these fields.

To produce the extended Exception Detail report:

1 Using the serial interface, display the Main menu.

Section 4.0 - Serial Interface tells how to display the Main menu. The Main menu looks like this.

```
SmartSCAN NG2
07/17/2017 13:41:18 EST
Main Menu - Comm
----------------------------
[A] - Train Summary
[B] - Train Detail
[C] - Exception Summary
[D] - Exception Detail
[E] - System Status Report
[F] - Last Train
            .
            .
            .
```

2 Select **Exception Detail**.

This prompt appears.

```
Enter Train Number:
```

3 Type the train number.

4 If you typed fewer than four digits, press **[Enter]**.

```
Abbreviated? (y/n)
```

5 To produce the extended Exception Detail report, type **N**

If you typed an invalid train number, the system prints “Train Not Found”, and the Main menu reappears. If the typed train number is valid, a report for that train is produced.

6. The Main menu reappears after a report is produced.

   At this time, you can produce another report by selecting appropriate option.

7. When done, close the LOG file.

8. To exit the serial interface and return the SmartScanNG² system to normal operation, type **X**

6.5 Abbreviated Exception Detail Report

The abbreviated Exception Detail report is like the extended Exception Detail report. However, the abbreviated report doesn't display all the recorded axle data. It only displays axle data for:

The car immediately preceding a car with an alarmed axle.

The car containing the alarmed axle.

The car immediately following the car with the alarmed axle.

For example, assume that a train consisted of 3 locomotives and 20 cars, and Exception Alarms were found on cars 3, and 15. The Abbreviated Exception Detail report for this train would only list axle data for cars 2, 3, 4, 14, 15, and 16. These car numbers comprise the alarmed cars themselves and all cars immediately before and immediately after them.

Like the extended Exception Detail report, the abbreviated Exception Detail report is divided into three sections. The header section contains general information about the site (like the MP/KP) and some detail information about the specific train (like the train's exit speed) that passed the site. The detail section contains more detailed information (like the bearing and wheel temperatures) about the specific train. In between these two sections is the system-events section, which contains all System Alarms and Exception Alarms associated with the train.

Below is a sample of part of an abbreviated Exception Detail report. The contents of your report will be similar.

```
                                EXCEPTION DETAIL
                                   ABBREVIATED
   ================================================================================
   Except#: 6                 Axles: 98          Speed               MP/KP: 1234.5
      Date: 08/22/17           Cars: 21          Min: 50             Track: Single
      Time: 17:05         Direction: South       Max: 50       Temperature:  +50F
   Site ID: NONAME    Shutters Open: 39          Avg: 50           Battery: 26.2v
                             Length: 2011       Exit: 50
   ================================================================================
                       Resistor             Transducer
   Scanner    Max Avg Read Req  CF        Count Spikes    Alarm        Limit  Carside Parms
   --------------------------------   ----------------    ------------------  -------------
   East  Brng  45  36  300 283B   0   TO1:   98      0    Absolute       200  Slope:   1.31
   West  Brng 206  38  300 284B   0   TO2:   98      0    Differential   115  Minimum:  155
   North Whl   32   2  285 280B   0                       Hot Wheel      698
   South Whl   31   1  292 278B   0                       Cold Rail Temp  10
   Resistor Test Mode: Enabled
   Cold Rail Test: All trains
   ================================================================================
   Software Version: UP_00-16 2017-08-16
   ================================================================================
   AEI System Data

   Tags Read          Tags Stored: 39
   --------------
   Antenna 0: 20
   Antenna 1: 19
   --------------------------------------------------------------------------------
   System Alarms

    None
   --------------------------------------------------------------------------------
   Integrity Failures

    None
   --------------------------------------------------------------------------------
   Axle Alarm Summary

     26 West Rail Absolute
   --------------------------------------------------------------------------------
   Announcements made

   " U P Detector Milepost 1 2 3 4 Point 5 "
   " <TONE> Defect Detected "
   " U P Detector Milepost 1 2 3 4 Point 5 First Hot Box West Rail Axle 2 6 From Head Of Train "
   " U P Detector Milepost 1 2 3 4 Point 5 First Hot Box West Rail Axle 2 6 From Head Of Train
Detector Out "
   ----------------------------------------------------------------------
                Rail       Wheel
    Car Axle  East  West  East  West  ON  OFF PW1 PW2  Alarms
   ----------------------------------------------------------------------
      4   19    34    37    35    28  27  192  13  13 FEC    4404
          20    35    37    35    28  27   75  13  13
          21    35    37    35    31  27  683  13  12
          22    35    37    36    31  27   63  13  13

      5   23    35    37    36    35  27  193  13  13 TTEX 353850
          24    35    37    36    35  27   75  13  13
          25    35    37    36    35  27  683  13  12
   B      26    35   205    36    35  27   64  13  13 West Rail Absolute

      6   27    35    37    36    35  27  193  13  13 CRLE   5123
          28    35    37    36    35  27   75  13  13
          29    35    37    35    28  27  683  13  12
          30    35    37    35    31  27   64  13  13
                                 .
                                 .
                                 .
```

To produce the abbreviated Exception Detail report:

1 Using the serial interface, display the Main menu.

Section 4.0 - Serial Interface tells how to display the Main menu. The Main menu looks like this.

```
SmartSCAN NG2, MP/KP:1234.5, Track:Single
07/25/2017 09:46:30, 28.1V, 76°F
Main Menu - Comm
----------------------------------------
[A] - Train Summary
[B] - Train Detail
[C] - Exception Summary
[D] - Exception Detail
[E] - System Status Report
[F] - Last Train
            .
            .
            .
```

2 Select **Exception Detail**.

This prompt appears.

```
Enter Train Number:
```

3 Type the train number.

4 If you typed fewer than four digits, press **[Enter]**.

```
Abbreviated? (y/n)
```

5 To produce the abbreviated Exception Detail report, type **Y**

If you typed an invalid train number, the system prints “Train Not Found” and the Main menu reappears. If the typed train number is valid, a report for that train is produced.

6 The Main menu reappears after a report is produced.

At this time, you can produce another report by selecting appropriate option.

7 When done, close the LOG file.

8 To exit the serial interface and return the SmartScanNG² system to normal operation, type **X**.

6.6 System Status Report

The System Status report contains the system's current setup configuration. Once a SmartScanNG² system is set up properly, print this report. Then, keep it in the wayside enclosure for future reference. Should you ever need to set up the system again, you'll have most of the information you'll need on this report. Below is a sample of the top half of a System Status report. The contents of your report will be different.

```
                              Southern Technologies Corporation
                               Next Generation Detector System
                                    SYSTEM STATUS REPORT
==============================================================================================
            Date:07/21/17  Time:14:59       Battery: 28.1v        Ambient Temp.: +88F
----------------------------------------------------------------------------------------------
 Board Rev....................... 1.2 or lower     MP/KP................................ 1234.5
 Time Zone........................... Eastern     Track................................ Single
 Daylight Savings Time................ Enabled     Track Dir................................ N/S
 AC Power.................................. On     Site ID................................ NONAME
 Talker Mode...................... Talk Freely     Velocity................................ COM3
 Multitech........................... Disabled     AC Surge Suppressor....................... OK

 Software Version
----------------------------------------------------------------------------------------------
 UP_00-16 2017-07-06

 Speech Version
----------------------------------------------------------------------------------------------
 0. UP Linda 1.1

 Alarm Settings
 ---------------------------------------------------------------------------------------------
 Absolute................................ 200     Differential............................ 115
 Hot Wheel............................... 698     Cold Journal Counter....................... 3
 Cold Journal Temp....................... 10     Cold Res Counter........................... 3
 Differential Enabled..................... No


 Alarm Settings (Advanced)
 ---------------------------------------------------------------------------------------------
 Carside Slope........................... 1.31     Carside Minimum......................... 155
 Res Test: Minimum Rail Avg............... 25     Res Test: Minimum Wheel Avg............... 28
 Bearing DSR Capture Temp................... 5     Wheel DSR Capture Temp..................... 5
 Max Alarms................................ 6

 Equipment Settings
 ---------------------------------------------------------------------------------------------
 Dragger................................. Yes     Hot Wheel............................... Yes
 Hot Bearing............................. Yes     High Load................................ No
 Wide Load................................ No     AEI...................................... Yes
 Presence Hardware........................ No     AC Power Off Monitor..................... Yes
 Cold Rail Test Mode............... All trains

 Equipment Settings (Advanced)
 ---------------------------------------------------------------------------------------------
 Carside Slope........................... No     Winter Cycle....................... Oct - Mar
 Gate Distance....................... 24.0 in     Dragger Debounce Time................. 100 ms
 Pre Train Dragger Dist................... 0 ft     Pre Train High/Wide Dist................ 0 ft
 Presence Timeout Period............... 10 sec     System Voltage......................... 12 V
 Resistor Test....................... Enabled     Clearance Mode................... Multiplexed
 Clearance Type................... Light Beam     Transducer Gain....................... Normal
 *Sun-shot Override....................... No     Transducer Type..................... Magnetic
                              .
                              .
                              .
```

* Currently unsupported by UP Firmware (continued on next page)

Below is a sample of the bottom half of a System Status report. The contents of your report will be different. The version information in the sample below is for illustrative purposes only. It doesn't represent any real release of the firmware.

```
                          .
                          .
                          .
Message Settings
-------------------------------------------------------------------------------------------
Customer Name........................... Yes     Axles..................................... No
Speed................................... No      Temperature............................... No
Slow.................................... Yes     Power Off................................. Yes
Length.................................. No      Cars Count................................ No
Lft/Rt Alarm Ref........................ No      Car ID With Alarm......................... No
Announce Cold Rail...................... Yes

Message Settings (Advanced)
-------------------------------------------------------------------------------------------
Announce Hot Wheels..................... Yes     Announce High/Wide........................ Yes
Rebroadcast Time Limit................ 10 min     Rebroadcast DTMF Code..................... 001
Num Repeat No Defects...................... 1     EOT Repeat Delay....................... 1 sec
Network Settings
-------------------------------------------------------------------------------------------
Use Static Address...................... Yes     Static Address................. 192.168.1.101
Static Mask.................... 255.255.255.0     Act as DHCP Server........................ No
TELNET Port............................... 23     FTP Port................................... 21
HTTP Port................................. 80     HTTPS Port............................... 8080
Use Wifi................................ Yes     Wifi SSID........................ NG2 Track 1

Wind Settings
-------------------------------------------------------------------------------------------
Wind Monitor................... Not Installed     High Wind Alarm Limit................. 50 mph
Display Wind Diagnostics................... No     Wind Poll Interval................... 15 sec
Slow Wind Speed Limit................... 2 mph     Upper Interval Identical Limit........ 30 min
Lower Interval Identical Limit....... 360 min     Wind Gust Interval...................... 5 min
Suspicious Temp. Interval........... 720 min     Re-enable Wind Updates................ 10 min
Wind Alarm Reporting Interval.......... 5 min

Port Settings
-------------------------------------------------------------------------------------------
COM1........................ Baud 19200 NA/NA     COM2........................ Baud 19200 NA/NA
COM3........................ Baud 19200 NA/NA     COM4........................ Baud 19200 NA/NA
COM5........................ Baud 19200 NA/NA     COM6........................ Baud 19200 NA/NA
RS485....................... Baud 9600 NA/NA

AEI Settings
-------------------------------------------------------------------------------------------
Tag Reader Type......................... MPRR     ID Separation............................. 2
Consecutive Reads........................... 2     MPRR Frequency................... 915.000 MHz
MPRR Attenuation............................ 0     Multi-Track Tag Filter................... Yes

Scanner Calibration Date / Digital Potentiometer Settings
-------------------------------------------------------------------------------------------
Rail1  Type III........ 07/20/2017 15:34 / 83     Rail2  Type III........ 07/20/2017 16:07 / 84
Wheel1 Type III........ 07/20/2017 15:15 / 73     Wheel2 Type III........ 07/20/2017 16:20 / 73

Resistor Baseline
-------------------------------------------------------------------------------------------
Rail 1 (Type III)....................... Valid     Rail 2 (Type III)....................... Valid
Wheel 1 (Type III)...................... Valid     Wheel 2 (Type III)...................... Valid
```

The table below lists the fields on the System Status report and the contents of each field.

Heading	Contents of Field
Date	The date at the time this report was generated. Date is in mm/dd/yy format.
Time	The time at the time this report was generated. Time is in 24-hour hh:mm format, where 8 a.m. is 08:00, noon is 12:00, 8 p.m. is 20:00, and midnight is 00:00.
Battery	The system battery voltage at the time this report was generated.
Ambient Temp	The ambient temperature at the time this report was generated. Temperature is in degrees Fahrenheit.
Board Rev	The revision of the 2300-110 System Interface board.
MP/KP	The five-digit milepost/kilometer post of the site.
Time Zone	The time zone that is currently defined in the system setup. Valid values are Eastern, Central, Mountain, and Pacific.
Track	The track designator of the site. For single-track sites, the value is Single. For double-track sites, valid values are 1, 2, 3, 4, 5, and 6.
Daylight Savings Time	Whether daylight-saving time is to be observed or not. If disabled, all times throughout the year are in standard time. If enabled, all times between the second Sunday in March and the first Sunday in November are in daylight-saving time. All other times are in standard time.
Track Dir	The track direction of the site. Valid values are N/S (for north/south) and E/W (for east/west).
AC Power	Indicates if AC power is present.
Site ID	The unique name or number identifying the sight.
Talker Mode	Indicates current Talker Mode setting.
Velocity	Indicates if enabled or disabled.
Multitech	Indicates if enabled or disabled.
AC Surge Suppressor	Indicates current status of AC surge suppressor.
Software Versions	The version numbers of the firmware and their release dates, which are in yyyy/mm/dd format. This firmware resides on the processor modules.
Speech Version	The version number of the Speech file.

Heading	Contents of Field
Alarm Settings	The alarm parameters and limits as they are currently defined in the system setup. ***Section 4.0 - Serial Interface*** tells how to change these parameters and limits using the Alarm Settings menu of the Setup menu.
Equipment	Equipment configuration as currently defined in the system setup. ***Section 4.0 - Serial Interface*** tells how to change this configuration using the Equipment Settings menu of the Setup menu.
Messages	Message configuration as currently defined in the system setup. ***Section 4.0 - Serial Interface*** tells how to change this configuration using the Messages menu of the Setup menu.
Network Settings	The network parameters as they are currently defined in the system setup. **Section 4.0 - Serial Interface** tells how to change these parameters using the Network Settings menu of the Setup menu.
Wind Settings	The Wind parameters as they are currently defined in the system setup. **Section 4.0 - Serial Interface** tells how to change these parameters using the Wind Settings menu of the Setup menu
Port Settings	Communications port parameter settings as currently defined in system setup. These parameters reflect the baud rate and parity settings for each communications port. ***Section 4.0 - Serial Interface*** tells how to change these parameter settings using the Setup menu.
AEI Settings	This heading appears when the AEI subsystem is enabled using the AEI option on the Equipment Settings menu. ***Section 4.0 - Serial Interface*** tells how to set these values using the AEI Reader Parameters menu of the Setup menu.
Scanner Cal. Date	Date and time each scanner was last calibrated and the associated calibration potentiometer settings for each.
Resistor Baseline	Indicates whether a valid resistor baseline has been acquired for each scanner.

To produce a System Status report:

1 Using the serial interface, display the Main menu.

Section 4.0 - Serial Interface tells how to display the Main menu. The Main menu looks like this.

```
SmartSCAN NG2, MP/KP:1234.5, Track:Single
07/21/2017 15:49:39, 28.1V, 89°F
Main Menu - Comm
----------------------------------------
[A] - Train Summary
[B] - Train Detail
[C] - Exception Summary
[D] - Exception Detail
[E] - System Status Report
[F] - Last Train
            .
            .
            .
```

2 Select **System Status**.

3 After producing the report, you are returned to the Main menu.

At this time, you can produce another report by selecting appropriate option.

4 When done, close the LOG file.

5 To exit the serial interface and return the SmartScanNG² system to normal operation, type **X**

6.7 Last Train Report

The Last Train report is identical to the Train Detail report. There is difference in the way you specify the train on which you want a report. For this report, you don't specify a train. A report on the most current train is produced.

To produce a Last Train Report, select the option from the Main Menu.

6.8 Range of Trains Report

The Range of Trains report is a set of Train Detail reports for a range of train numbers. The Train Summary report can be used to get a list of train numbers for trains that are currently stored in the detector.

1 Using the serial interface, display the Main menu.

Section 4.0 - Serial Interface tells how to display the Main menu. The Main menu looks like this.

```
SmartSCAN NG2, MP/KP:1234.5, Track:Single
07/21/2017 15:49:39, 28.1V, 89°F
Main Menu - Comm
----------------------------------------
[A] - Train Summary
[B] - Train Detail
[C] - Exception Summary
[D] - Exception Detail
[E] - System Status Report
[F] - Last Train
[G] - Range of trains
            .
            .
            .
```

2 Select **Range of trains**.

A prompt like this appears:

```
Trains stored: 13
Oldest train: 1
Newest train: 13
Enter first train:
Enter a value from 1 to 9999:
```

3 Enter a value from 1 to 9999 for the first train, then a value from 1 to 9999 for the last train to produce the report,

At this time, you can produce another report by selecting appropriate option.

4 To exit the serial interface and return the SmartScanNG² system to normal operation, type **X**

6.9 Train DSRs

Train DSR (Dynamic Scan Rate) records store those temperature samples collected by a scanner that exceed the warm-bearing or warm-wheel trigger level. Only 16 bearing-related DSR records are kept per train. When prompted, type a train number from the Train Summary report. The train number appears under the column titled "Train#" in the detail section of that report. Those trains with DSR records will have a single character status code in column A (see Section 6.1) of the Train Summary Report.

1 Using the serial interface, display the Main menu.

Section 4.0 - Serial Interface tells how to display the Main menu. The Main menu looks like this.

```
SmartSCAN NG2, MP/KP:1234.5, Track:Single
07/21/2017 15:49:39, 28.1V, 89°F
Main Menu - Comm
----------------------------------------
           .
           .
           .
[F] - Last Train
[G] - Range of trains
[H] - Train DSRs
           .
           .
           .
```

2 Select **Train DSRs**.

A prompt like this appears:

```
Enter train number:
```

3 Enter the number of the selected train to produce the report,

```
Exception train? (y/n)
```

A record like this appears:

```
No bearing DSRs stored.

Warmest 16 Wheel DSRs:
Axle 13, Scanner 3:
0,0,0,0,0,0,0,0,0,0,0,20,41,75,114,159,202,239,259,291,312,336,368,407,441,462,
484,491,484,462,435,390,340,292,240,192,152,116,88,66,49,42,33,28,24,20,16,0,0,
0,0,0,0,0,0,0,0,0,0,0,0,0,0,0,0,0,0,35,77,142,197,256,317,362,395,408,407,390,3
74,349,319,286,238,196,159,125,92,71,52,41,33,28,24,20,16,0
Axle 13, Scanner 2:
0,0,0,0,0,0,0,0,0,0,0,0,33,64,96,138,173,199,234,251,290,314,353,398,442,483,51
1,533,549,549,535,510,478,431,372,312,250,205,169,134,99,78,64,46,39,35,28,24,2
0,16,0,0,0,0,0,0,0,0,0,0,0,0,0,0,0,28,64,123,186,244,307,363,413,441,454,450,
435,402,362,322,279,235,190,154,116,88,69,49,42,35,28,24,20,16,0
Axle 14, Scanner 2:
0,0,0,0,0,0,0,0,0,0,0,0,0,0,0,0,28,64,116,169,215,251,305,352,402,446,487,511,5
26,530,521,508,464,428,371,310,249,201,165,130,99,77,58,44,36,31,28,20,16,0,0,0
,0,0,0,0,0,0,0,0,0,0,0,0,0,0,20,49,99,165,224,279,328,366,397,408,408,400,382
,361,336,307,270,235,190,154,123,92,71,54,41,33,28,24,20
```

6.10 AEI Diagnostic Detail Report

The AEI Diagnostic Detail report provides detailed information on a single train. It contains information that can be useful in troubleshooting AEI related problems. When choosing this report, you'll be prompted for a train number. When prompted, type a train number from the Train Summary report. The train number appears under the column titled "Train#" in the detail section of that report.

The AEI subsystem is enabled/disabled using the AEI option on the Equipment Settings menu. If the AEI option is disabled during train passage, no AEI information is recorded.

Below is a sample of part of an AEI Diagnostic Detail report when the AEI option was enabled at the time the report was requested and while the specified train was passing the site. The contents of your report will be similar.

The AEI Diagnostic Detail report is divided into two sections. The header section contains general information about the site (like the MP/KP) and some detail information about the specific train (like the train's exit speed) that passed the site. The detail section contains more detailed information (like the car number) about the specific train.

```
                        Southern Technologies Corporation
                         Next Generation Detector System
                                 AEI Diagnostic
================================================================================
Train#: 287                  Speed:  42MPH                 MP/KP: 1234.5
  Date: 07/21/17             Axles: 280                    Track: Single
  Time: 12:47            Direction: North            Temperature:  +86F
Length:  6577        Shutters Open:  109                 Battery: 27.9v
================================================================================
AEI System Data

Tags Read          Tags Stored: 81
--------------
Antenna 0: 40
Antenna 1: 41
================================================================================
Software Version    Package: UP_00-16 2017-07-06  09-08-48
--------------------------------------------------------------------------------

-------------------------------------------------------------------------------
TMSTMP  Axle Truck  On  Off  PW1 PW2
00000 Car=1, Axles=6, Trks=2, Tags=1, Spd=45, Len=71, Ant0Window=00000|00350
00011      1    1   29    0  13 14
00105      2    1   29   66  11 12
00203      3    1   29   68  12 13

00679   *BNSF  8046 side=L trk=2 len=73 axls=6 S|L|0|4 hs0= 0 hs1= 4 flags=201
00691      4    2   29  458  12 12
00788      5    2   30   67  13 13

00885      6    2   29   67  12 12
00986 CarEnd=  1, flags=2, Ant1Window=00594|00986


00987 Car=2, Axles=6, Trks=2, Tags=2, Spd=45, Len=72, Ant0Window=00987|01426
01086      7    3   29  171  11 12
01184      8    3   29   67  12 12
01281      9    3   29   67  12 13
01319   *BNSF  5386 side=L trk=3 len=73 axls=6 S|L|0|2 hs0= 3 hs1= 9 flags=111

01765    BNSF  5386 side=R trk=4 len=73 axls=6 S|L|0|2 hs0= 3 hs1= 9 flags=224
01770     10    4   29  458  12 12
01867     11    4   29   67  12 13
01965     12    4   29   67  13 13
02044 CarEnd=  2, flags=6, Ant1Window=01673|02044


02045 Car=3, Axles=8, Trks=4, Tags=2, Spd=45, Len=206, Ant0Window=02045|02334
02122     13    5   29  128  12 11
02207     14    5   29   55  13 13
02215   *DTTX721666 side=R trk=5 len=204 axls=8 S|R|1|2 hs0= 8 hs1=16 flags=111

03053     15    6   29  817  12 12
03143     16    6   29   59  12 13

03996     17    7   29  823  14 14
04085     18    7   29   58  13 13

04933     19    8   29  818  11 12
04937    DTTX721666 side=L trk=8 len=204 axls=8 S|R|2|2 hs0= 8 hs1=16 flags=224
05017     20    8   29   54  12 12
05077 CarEnd=  3, flags=5, Ant1Window=04849|05077
              .
              .
              .
```

The table below lists the fields from the header section and the contents of each field.

Heading	Contents of Field
Train#	The number that identifies the train in the Trains directory.
Date	The date the train arrived at the site. Date is in mm/dd/yy format. ***Section***
Time	The time the train arrived at the site. Time is in 24-hour hh:mm format, where 8 a.m. is 08:00, noon is 12:00, 8 p.m. is 20:00, and midnight is 00:00.
Length	The length of train in feet.
Speed	The train's exit speed in miles per hour.
Axles	The total number of axles counted by the SmartScanNG² system.
Direction	The direction the train was traveling. Valid values are North, South, East, and West.
Shutters Open	The number of seconds it took the train to pass over the site.
MP/KP	The five-digit milepost/kilometer post of the site.
Track	The track designator of the site. For single-track sites, the value is Single. For double-track sites, valid values are 1, 2, 3, 4, 5, and 6.
Temperature	The ambient temperature at the time the train arrived at the site. Temperature is in degrees Fahrenheit.
Battery	The system battery voltage at the time the train passed the site.
Tags Read	Total number of tags read from Antenna 0 and Antenna 1.
Tags Stored	Total number of tags stored.
Software Version	The version numbers of the firmware and their release dates, which are in yyyy/mm/dd format. This firmware resides on the processor modules.

The following excerpt is from the detail section of the AEI Diagnostic report

```
                .
                .
                .
TMSTMP  Axle Truck  On  Off  PW1 PW2
00000 CarStart=1, Axles=4, Trucks=2, Tags=1, Speed=23, Len=59
00026      1    1   58    0  19 19
00285      2    1   59  203  12 10

00945   NS  6113 side=L trk=2 len=59 axls=4 51|5|0|2 hs0= 0 hs1=13 flags=181
01030      3    2   58  685  20 20
01294      4    2   58  205  15 14
01535 CarEnd=  1
                .
                .
                .
```

The table below lists the fields from the detail section and the contents of each field.

Heading	Contents of Field
TMSTMP	The timestamp of the recorded event. Indicates the number of milliseconds elapsed since the train was first detected by the system.
Axle	The axle number.
Truck	The sequential number assigned by the SmartScanNG² to a railcar truck (wheel assembly). Truck numbering starts with 0 and increases through to the end of the train. Each axle recorded is associated with a truck – axles are grouped by trucks.
ON	The number of milliseconds a bearing was scanned.
OFF	The number of milliseconds between axles (when no axle was between the gating transducers).
PW1	The recorded width of the pulse generated by gating transducer TO1. Slower trains generate wider pulse widths than faster moving trains.
PW2	The recorded width of the pulse generated by gating transducer TO2. Slower trains generate wider pulse widths than faster moving trains.

The AEI Diagnostic report has one line of data for every AEI tag recorded. See highlighted data line in example below.

```
              .
              .
              .
TMSTMP  Axle Truck  On  Off  PW1 PW2
00000 CarStart=1, Axles=4, Trucks=2, Tags=1, Speed=23, Len=59
00026      1    1   58    0  19 19
00285      2    1   59  203  12 10

00945   UP  6113 side=L trk=2 len=59 axls=4 51|5|0|2 hs0= 0 hs1=13 flags=181
01030      3    2   58  685  20 20
01294      4    2   58  205  15 14
01535 CarEnd=  1
              .
              .
              .
```

The table below defines the relevant fields in the AEI tag portion of car data.

Field Value	Field Definition
00945	Timestamp of tag read.
UP 6113	AEI vehicle identification
side=L	The side indicator field read from the tag.
trk=2	Truck two of car.
len=59	Car length field read from the tag.
axls=4	The axle count field read from the car.
51|5|0|2	**51** is the Data Format Code. **5** is the Equipment Group Code (5 = locomotive). **0** is the Platform Code. **2** is the Tag Type.
hs0= 0	Handshakes from antenna-0 equals zero.
hs1=13	Handshakes from antenna-1 equals thirteen.
flags=181	Diagnostic code (for STC use)

To produce an AEI Diagnostic report:

1 Using the serial interface, display the Main menu.

Section 4.0 - Serial Interface tells how to display the Main menu. The Main menu looks like this.

```
            .
            .
            .
[H] - Train DSRs
[I] - AEI Diagnostic
[J] - Setup
[K] - Event log
            .
            .
            .
```

2 Select **AEI Diagnostic**.

This prompt appears.

```
Enter Train Number:
```

3 Type the train number.

If the train number of the train you wish to print is fewer than four digits, press [Enter] after typing the digits.

If you enter an invalid train number, the system prints “Train Not Found”, and the main menu reappears.

4 To return to the Main menu after a report is produced, press any key.

At this time, you can produce another report by selecting appropriate option.

5 When done, close the LOG file.

6 To exit the serial interface and return the SmartScanNG² system to normal operation, type **X**

6.11 Event Log Report

The Event Log report is used for diagnostics. As certain system events occur, entries are posted to the event log. Log entries contain a timestamp which reflects the time at which the entry was posted to the log, a reference number for the system task that triggered the event, and a description of the event.

Entries in the Event Log are listed in chronological order, beginning with the most recent event. The entries in the Event Log can deleted with the Clear Event Log option on the System Functions Menu.

Below is a sample of part of an Event Log report. The contents of your report will be similar. Each line of text contains these fields.

- The date at which the event was recorded (date is in mm/dd/yyyy format)
- The time at which the event was recorded (time is in 24-hour hh:mm:ss format, where 8 a.m. is 08:00:00, noon is 12:00:00, 8 p.m. is 20:00:00, and midnight is 00:00:00)
- The software task reference number (used for diagnostic purposes)
- The event description

```
Log: /FLASH/SYSTEM/logs/EVENTLOG.txt
---------
[07/21/2017 15:47:28] (55) - Admin logged in: id-23, telnet ip-184.174.165.45
[07/21/2017 15:47:08] (55) - Telnet Connection timed out: id-23
[07/21/2017 15:36:20] (55) - Admin logged in: id-23, telnet ip-184.174.165.45
[07/21/2017 15:36:06] (55) - User login failed, telnet ip-184.174.165.45
[07/21/2017 15:32:36] (48) - Stored train #288
[07/21/2017 15:32:30] (48) - Train Departure
[07/21/2017 15:30:58] (55) - Telnet Connection timed out: id-28
[07/21/2017 15:29:58] (48) - Train Arrival
[07/21/2017 14:56:48] (55) - Admin logged in: id-28, telnet ip-184.174.165.45
[07/21/2017 13:26:49] (55) - Telnet Connection timed out: id-27
[07/21/2017 13:13:30] (55) - Admin logged in: id-27, telnet ip-184.174.165.45
[07/21/2017 12:49:50] (48) - Stored train #287
[07/21/2017 12:49:46] (48) - Train Departure
[07/21/2017 12:47:49] (48) - Train Arrival
[07/21/2017 12:24:22] (48) - Stored train #286
[07/21/2017 12:24:14] (48) - Train Departure
[07/21/2017 12:23:05] (48) - Train Arrival
[07/21/2017 12:04:12] (55) - Telnet Connection timed out: id-27
                            .
                            .
                            .
```

To produce an Event Log report:

1 Using the serial interface, display the Main menu.

Section 4.0 - Serial Interface tells how to display the Main menu. The Main menu looks like this.

```
            .
            .
            .
[H] - Train DSRs
[I] - AEI Diagnostic
[J] - Setup
[K] - Event log
            .
            .
            .
```

2 Select **Event Log**.

The Main menu reappears after the report has completed.
At this time, you can produce another report by selecting the appropriate option.

3 When done, close the LOG file.

4 To exit the serial interface and return the SmartScanNG² system to normal operation, type **X**

7.0 Radio Announcements

Currently, the two ways of reporting defects are:

- Announcements made via the road channel
- Reports, which may be printed to provide detailed defect information

This section describes radio announcements. The prior section described reports.

Radio announcements consist of a set of predefined spoken messages with each message triggered by a particular event or set of events. The message formats and announcement criteria are covered below.

In the examples that follow, the message " U P Detector " is announced because it was enabled using the **Announce Customer Name option** on the Messages menu. ***Section 4.0 - Serial Interface*** tells how to enable and disable this message.

Anytime a message needs to be announced, the expanded holdoff logic kicks in, and the process is as follows:

1 Check the Holdoff line.

The Holdoff line is enabled when the road channel is busy.

2 If the Holdoff line is free, and has been free for at least two seconds, announce your messages and skip the remaining steps.

3 If the Holdoff line is currently in use, start the Holdoff timer and begin monitoring the Holdoff line. The maximum amount of time the system delays spoken announcements, while waiting for a busy radio channel to clear, is 40 seconds.

4 If the Holdoff line frees up before the Holdoff timer expires, return to step **1**.

5 If the Holdoff timer expires without the Holdoff line ever becoming free, announce your messages.

7.1 Arrival Messages

The Arrival Message is used to announce train arrival at the site. Its use is optional. Whether or not a site announces the Arrival Message is determined by the current value of the Talker Mode configuration option. If the Talker Mode is set to Talk Freely or Talk Reduced, the Arrival Message will be announced. If the Talker Mode is set to Talk On Defect Only, the Arrival Message will not be announced. **Section 4.0 Serial Interface** tells how to change the setting of the Talker Mode option.

The format of this announcement is:

[customer name] Milepost (mile) [track indicator]

At a multitrack site, "track indicator" represents the position in the message text that the track designator (such as "Track Two") is inserted into the announcements. At a single-track site, no message text is inserted for track indicator.

For example, at a single-track site, the announcement is like this. In this example, milepost 359.4 was used.

U P Detector
Milepost 3-5-9 point 4

At a multitrack site, the announcement is like this. In this example, milepost 297.1 was used.

U P Detector
Milepost 2-9-7 Point 1
Track Two

The arrival message is announced once per train.

7.2 Real-Time Messages

Real-time messages are announcements that occur as the train is passing over the site. They are announced using a 1000-hertz tone. When the first alarm is detected, the tone is issued followed by the words "defect detected." All subsequent alarm announcements only use the tone. One tone is issued for each alarm detected up to and including twice the maximum number of alarms specified using the **Max Alarms option** on the Alarm Settings (Advanced) submenu.

For example, at a site having five alarms, the announcement is like this. For this example, the maximum number of alarms was set to a value greater than two.

(tone)
Defect Detected
(tone)
(tone)
(tone)
(tone)

When Dragging Equipment, High Load, or Wide Load detector outputs are active as a train enters the site, “Detector Malfunction” messages appear in the real-time announcements, preceding any real-time announcements for alarms associated with an axle. A separate message appears for each active alarm type. If both Wide-Load outputs are active as a train enters a site, only one “Wide-Load Detector Malfunction” message is announced.

For example at a single-track site with the Dragging-Equipment detector active as the train arrives, the announcement is like this.

(tone)
Dragging Equipment Detector Malfunction

At a single-track site with the High-Load and one or both Wide-Load detectors active as the train arrives, the announcement is like this.

(tone)
High-Load Detector Malfunction
(tone)
Wide-Load Detector Malfunction

At a single-track site having three Hotbox alarms, and with the Dragging-Equipment, High-Load, and one or both Wide-Load detectors active as the train arrives, the announcement is like this.

(tone)
Dragging Equipment Detector Malfunction
(tone)
High Load Detector Malfunction
(tone)
Wide Load Detector Malfunction
(tone)
Defect Detected
(tone)
(tone)

7.3 Post-Train Messages

Post-train (end-of-train) announcements are given after the train has left the site and all the recorded train data has been processed by the SmartScanNG².

These messages consist of three distinct scenarios:

Exception Alarms <u>not</u> detected and Integrity Failures <u>not</u> detected

Exception Alarms <u>not</u> detected and Integrity Failures detected

Exception Alarms detected

Exception Alarms are associated with axles. There are 8 of them. They are the Absolute, Carside Slope, Differential, Dragging-Equipment, High-Load, Hotwheel, Pyrometer Saturation, and Wide-Load alarms.

The four types of **Hotbox alarms** (hot bearing alarms) are Absolute alarms, Differential alarms, Pyrometer Saturation alarms, and Carside Slope alarms. When one of these four alarms occurs, a Hotbox alarm is announced.

Integrity Failures indicate conditions in which the integrity of the system, and its ability to record train data accurately, may be compromised. See Appendix B for a listing of the Integrity Failures supported by the SmartScanNG².

```
SmartSCAN NG2, MP/KP:1234.5, Track:Single
07/24/2017 09:53:41, 28.0V, 72°F
Messages Settings
----------------------------------------
[A] - Axles ......................... No
[B] - Speed ......................... No
[C] - Temperature ................... No
[D] - Length ........................ No
[E] - Slow ......................... Yes
[F] - Power Off .................... Yes
[G] - Customer Name ................ Yes
[H] - Lft/Rt Alarm Ref ............. No
[I] - Car ID With Alarm ............ No
[J] - Advanced
[X] - Exit
```

The above highlighted options on the Messages submenu are used to affect the phrases broadcast to a passing train.

Below is the Messages Settings (Advanced) submenu. The options on this submenu are used to enabled or disable Hot Wheel and High/Wide announcements and to modify the parameters associated with the Rebroadcast function and the announcement of EOT messages.

```
Messages Settings (Advanced)
----------------------------------------
[A] - Announce Hot Wheels .......... Yes
[B] - Announce High/Wide ........... Yes
[C] - Rebroadcast Time Limit .... 10 min
[D] - Rebroadcast DTMF Code ........ 001
[E] - Num Repeat No Defects ......... 1
[F] - EOT Repeat Delay ........... 1 sec
[X] - Exit
```

In the examples that follow, not all ancillary messages are shown. This is because only axle count and train speed were enabled. Site ambient temperature, train length, and power off were disabled. ***Section 4.0 - Serial Interface*** tells how to enable and disable these messages using the Messages submenu.

7.3.1 Nothing Detected

When neither an Exception Alarm nor an Integrity Failure is detected, the no-defects message is announced. The format of this announcement is:

[U P Detector Milepost (mile) [track indicator] No Defects *(pause)*]
[U P Detector Milepost (mile) [track indicator] No Defects *(pause)*]
U P Detector Milepost (mile) [track indicator] No Defects
[ancillary messages]
Detector Out

By using the **Num Repeat No Defects and EOT Repeat Delay** option on the Messages Settings (Advanced) submenu, you can customize the number of times the detector makes the no-defects announcement and the number of seconds the detector pauses between each of the no-defects messages. Any ancillary messages and the detector-out message occur only once and follow the final no-defects announcement.

For example, at a single-track site with the **Num Repeat No Defects** option set to one, the announcement is like this.

U P Detector
Milepost 3-2-1 point 4
No Defects
Total Axles 1-0-0
Speed 4-5
Detector Out

At a single-track site with the **Num Repeat No Defects** option set to three and the **EOT Repeat Delay** option set to five, the announcement is like this.

U P Detector
Milepost 1-7-9 point 5
No Defects
(5-second pause)
U P Detector
Milepost 1-7-9 point 5
No Defects
(5-second pause)
U P Detector
Milepost 1-7-9 point 5
No Defects
Total Axles 1-0-2
Speed 5-3
Detector Out

At a double-track site with the **Num Repeat No Defects** option set to one, the announcement is like this.

U P Detector
Milepost 2-5-4 point 5
Track-1
No Defects
Total Axles 1-0-0
Speed 4-5
Detector Out

If the system's milepost setting is "0000.0," the firmware eliminates both the word "milepost" and the milepost number from the message. The rest of the message announces as shown above.

7.3.2 Only an Integrity Failure Detected

Integrity failures are caused when the system determines that a condition exists that could prevent proper scanning of a train. They indicate an unusual operating condition that may require maintenance. Integrity failures appear in the header of Train Detail reports and Exception Detail reports.

When no Exception Alarms are detected but an Integrity Failure is detected, only Integrity Failure is announced. The format of this announcement is:

U P Detector Milepost (mile) [track indicator] Integrity Failure
U P Detector Milepost (mile) [track indicator] Integrity Failure [ancillary messages]
Detector Out

For example, at a double-track site, the announcement is like this.

U P Detector
Milepost 2-5-4 point 5
Track-1
Integrity Failure
U P Detector
Milepost 2-5-4 point 5
Track-1
Integrity Failure
Total Axles 1-2-4
Speed 4-8
Detector Out

If the system's milepost setting is "0000.0," the firmware eliminates both the word "milepost" and the milepost number from the message. The rest of the message announces as shown above.

7.3.3 Exception Alarms Detected

When one or more Exception Alarms are detected, the alarms are announced. The format of this announcement is:

U P Detector Milepost (mile) [track indicator] [alarm announcements]
U P Detector Milepost (mile) [track indicator] [alarm announcements] [ancillary messages]
Detector Out

For example, at a single-track site having one Hotbox alarm, the announcement is like this.

U P Detector
Milepost 3-2-1 point 4
First-Hotbox West-Rail Axle-7-5 From-Head-of-Train
U P Detector
Milepost 3-2-1 point 4
First-Hotbox West-Rail Axle-7-5 From-Head-of-Train
Total Axles 1-0-0
Speed 4-5
Detector Out

At a single-track site having one Hotwheel alarm, the announcement is like this.

U P Detector
Milepost 3-2-1 point 4
First-Hotwheel West-Rail Axle-7-5 From-Head-of-Train
U P Detector
Milepost 3-2-1 point 4
First-Hotwheel West-Rail Axle-7-5 From-Head-of-Train
Total Axles 1-0-0
Speed 4-5
Detector Out

At a single-track site having two Hotbox alarms, the announcement is like this.

U P Detector
Milepost 3-2-1 point 4
First-Hotbox West-Rail Axle-7-5 From-Head-of-Train
Second-Hotbox East-Rail Axle-8-0
U P Detector
Milepost 3-2-1 point 4
First-Hotbox West-Rail Axle-7-5 From-Head-of-Train
Second-Hotbox East-Rail Axle-8-0
Total Axles 1-0-0
Speed 4-5
Detector Out

At a single-track site having one Hotbox alarm and one Dragging-Equipment alarm, the announcement is like this.

U P Detector
Milepost 3-2-1 point 4
First-Hotbox West-Rail Axle-7-5 From-Head-of-Train
First-Dragging-Equipment Near-Axle-8-4
U P Detector
Milepost 3-2-1 point 4
First-Hotbox West-Rail Axle-7-5 From-Head-of-Train
First-Dragging-Equipment Near-Axle-8-4
Total Axles 1-0-0
Speed 4-5
Detector Out

When the number of detected alarms exceeds the **Max Alarms** option on the Alarm Settings (Advanced) submenu, a “Multiple … Detected From Axle… To End of Train” message follows the alarm announcements.

At a single-track site having more Dragging-Equipment alarms than the maximum alarm setting and a detected Integrity Failure, the announcement is like this. For this example, the maximum number of alarms was set to two.

U P Detector
Milepost 3-2-1 point 4
First-Dragging-Equipment Near-Axle-1-2 From-Head-of-Train
Second-Dragging-Equipment Near-Axle-1-4
Multiple-Dragging-Equipment Detected From-Axle-1-8 To-End-of-Train
U P Detector
Milepost 3-2-1 point 4
First-Dragging-Equipment Near-Axle-1-2 From-Head-of-Train
Second-Dragging-Equipment Near-Axle-1-4
Multiple-Dragging-Equipment Detected From-Axle-1-8 To-End-of-Train
Total Axles 1-0-0
Speed 4-5
Detector Out

At a single-track site having a combined number of Hotbox, High-Load, and Wide-Load alarms greater than the maximum alarm setting, the announcement is like this. For this example, the maximum number of alarms was set to three.

U P Detector
Milepost 3-2-1 point 4
First-High-Load Near Axle-1-2 From-Head-of-Train
First-Wide-Load East-Rail-Near Axle-1-4
First-Hotbox West-Rail Axle-2-5
Multiple-Hotbox High-Load and Wide-Load Detected From-Axle-2-8 To-End-of-Train
U P Detector
Milepost 3-2-1 point 4
First-High-Load Near Axle-1-2 From-Head-of-Train
First-Wide-Load East-Rail-Near Axle-1-4
First-Hotbox West-Rail Axle-2-5
Multiple-Hotbox High-Load and Wide-Load Detected From-Axle-2-8 To-End-of-Train
Total Axles 1-0-0
Speed 4-5
Detector Out

When Dragging Equipment, High Load, or Wide Load detector outputs are active as a train enters the site, “Detector Malfunction” messages appear in the post-train announcements, preceding any announcements for alarms associated with an axle. A separate message appears for each active alarm type. If both Wide-Load outputs are active as a train enters a site, only one “Wide-Load Detector Malfunction” message is announced.

For example at a single-track site with the Dragging-Equipment detector active as the train arrives, the announcement is like this.

U P Detector
Milepost 3-2-1 point 4
Dragging Equipment Detector Malfunction
U P Detector
Milepost 3-2-1 point 4
Dragging Equipment Detector Malfunction
Total Axles 1-0-0
Speed 4-5
Detector Out

At a single-track site with the High-Load and one or both Wide-Load detectors active as the train arrives, the announcement is like this.

U P Detector
Milepost 3-2-1 point 4
High-Load Detector Malfunction
Wide-Load Detector Malfunction
U P Detector
Milepost 3-2-1 point 4
High-Load Detector Malfunction
Wide-Load Detector Malfunction
Total Axles 1-0-0
Speed 4-5
Detector Out

At a single-track site having three Hotbox alarms, and with the Dragging-Equipment, High-Load, and one or both Wide-Load detectors active as the train arrives, the announcement is like this.

U P Detector
Milepost 3-2-1 point 4
Dragging Equipment Detector Malfunction
High-Load Detector Malfunction
Wide-Load Detector Malfunction
First-Hotbox East-Rail Axle-1-2 From-Head-of-Train
Second-Hotbox West-Rail Axle-1-4
Third-Hotbox East-Rail Axle-1-6
U P Detector
Milepost 3-2-1 point 4
Dragging Equipment Detector Malfunction
High-Load Detector Malfunction
Wide-Load Detector Malfunction
First-Hotbox East-Rail Axle-1-2 From-Head-of-Train
Second-Hotbox West-Rail Axle-1-4
Third-Hotbox East-Rail Axle-1-6
Total Axles 1-0-0
Speed 4-5
Detector Out

When a catastrophic transducer failure occurs in conjunction with an auxiliary alarm, alarm announcements omit the alarm sequence numbers (that is, “first,” “second,” … “ninth”), the axle numbers, and the phrase “From Head Of Train.” If announcing a “Multiple … Detected From Axle… To End of Train” message, “From Axle… To End of Train” does not announce.

For example, at a single-track site with a malfunctioning TO1 transducer, an active Dragging Equipment output within the first three recorded axles, and a Hotbox alarm, the announcement is like this.

U P Detector
Milepost 3-2-1 point 4
Dragging Equipment Detected
Hotbox Detected East-Rail
U P Detector
Milepost 3-2-1 point 4
Dragging Equipment Detected
Hotbox Detected East-Rail
Total Axles 1-0-0
Speed 4-5
Detector Out

At a single-track site with a malfunctioning TO2 transducer, an active High-Load output within the first three recorded axles, a Wide-Load alarm, and a Hotwheel alarm, the announcement is like this.

U P Detector
Milepost 3-2-1 point 4
High-Load Detected
Hot Wheel Detected West-Rail
Wide-Load Detected East-Rail
U P Detector
Milepost 3-2-1 point 4
High-Load Detected
Hot Wheel Detected West-Rail
Wide-Load Detected East-Rail
Total Axles 1-0-0
Speed 4-5
Detector Out

At a single-track site with a malfunctioning TO2 transducer, an active High-Load output within the first three recorded axles, a Wide-Load alarm, and a Hotwheel alarm, the announcement is like this. For this example, the maximum number of alarms was set to two.

U P Detector
Milepost 3-2-1 point 4
High-Load Detected
Wide-Load Detected East-Rail
Multiple-High-Load Wide-Load and Hot Wheel Detected
U P Detector
Milepost 3-2-1 point 4
High-Load Detected
Wide-Load Detected East-Rail
Multiple-High-Load Wide-Load and Hot Wheel Detected
Total Axles 1-0-0
Speed 4-5
Detector Out

If the system's milepost setting is "0000.0," the firmware eliminates both the word "milepost" and the milepost number from the message. The rest of the message announces as shown above.

The **Clearance Mode** option on the Equipment Settings (Advanced) submenu lets you pick how you want a clearance alarm to be announced. Select Multiplexed when a single trip wire is used for both high-load and wide-load detection. Select Separate when each high-load and wide-load detector has its own detection hardware.

In the next example, each high-load and wide-load detector is wired individually to its input. The Clearance Mode option was set to **Separate**. And, one High-Load alarm is the only Exception Alarm that was encountered at this single-track site.

U P Detector
Milepost 3-2-1 point 4
First-High-Load Near Axle-7-5 From-Head-of-Train
U P Detector
Milepost 3-2-1 point 4
First-High-Load Near Axle-7-5 From-Head-of-Train
Total Axles 1-0-0
Speed 4-5
Detector Out

In the next example, a single trip wire is used for both high load and wide load detection. The Clearance Mode option was set to **Multiplexed**. And, one High-Load alarm is the only Exception Alarm that was encountered at this single-track site.

U P Detector
Milepost 3-2-1 point 4
First-High-Wide Near Axle-7-5 From-Head-of-Train
U P Detector
Milepost 3-2-1 point 4
First-High-Wide Near Axle-7-5 From-Head-of-Train
Total Axles 1-0-0
Speed 4-5
Detector Out

7.4 Rebroadcasting Post-Train Messages

Following train passage, recorded post-train announcements are available for rebroadcast until the time period defined by the **Rebroadcast Time Limit option** expires. Recorded messages are available indefinitely if this value is zero.

When rebroadcasting a recorded post-train announcement, the format used is:

Rebroadcast
(train messages) [ancillary messages]
Rebroadcast
Detector Out

For example, if the **Num Repeat No Defects** option on the Messages Settings (Advanced) submenu is set to 2, the **EOT Repeat Delay** option (on the same menu) is set to 3 seconds, and neither an Exception Alarm nor an Integrity Failure is detected on the last train, the format of the rebroadcast message is:

Rebroadcast
U-P Detector Milepost (mile) [track indicator] No Defects
(3-second pause)
U-P Detector Milepost (mile) [track indicator] No Defects [ancillary messages]
Rebroadcast
Detector Out

When no Exception Alarms are detected but an Integrity Failure is detected on the last train, the format of the rebroadcast message is:

Rebroadcast
U-P Detector Milepost (mile) [track indicator] Integrity Failure
U-P Detector Milepost (mile) [track indicator] Integrity Failure [ancillary messages]
Rebroadcast
Detector Out

When one or more Exception Alarms are detected on the last train, the format of the rebroadcast message is:

Rebroadcast
U-P Detector Milepost (mile) [track indicator] [alarm announcements]
U-P Detector Milepost (mile) [track indicator] [alarm announcements] [ancillary messages]
Rebroadcast
Detector Out

When no recorded post-train announcement exists, the system announces a default message. The format of this message is:

Rebroadcast
U-P Detector Milepost (mile) [track indicator]
No Rebroadcast
Detector Out

Only a train's post-train announcements are recorded. Arrival messages and real-time messages are ignored. Any changes the customer makes to the ancillary announcement options or any dynamic change of the Talker Mode has no effect on the rebroadcast message. It plays whatever the last passing train heard, regardless of the current system settings.

8.0 Scheduled Maintenance

This section lists the items that STC recommends be done during scheduled maintenance.

An up-and-running SmartScanNG² system needs to be visited from time to time to do scheduled maintenance. The frequency of these visits is up to the customer. STC recommends visits every 30 to 90 days. Maintenance requirements change with environmental conditions. For example, if the system is installed in a damp or a dusty environment, it may be necessary to visit the location more frequently to clean the optics. The optical system is the item most likely to need periodic maintenance. If moisture or dust isn't a problem, you may not need to do scheduled maintenance more often than every 90 days.

What is done during a maintenance visit is up to the customer. However, STC does have some recommendations. For normal scheduled maintenance, STC recommends these steps.

1 Be sure that you have on hand a 50-foot (15-meter) or longer tape measure, a #2 Phillips head screwdriver, a small slotted screwdriver, a 9/16-inch torque wrench, a laptop computer, a multimeter, and the alignment fixture.

2 At trackside, check track conditions on all tracks.

3 If any track is pumping (vertical displacement of the rails) or running (lateral displacement of the rails) more than 2 inches (5 centimeters), have it repaired before proceeding.

4 At trackside, check for damaged transducers, damaged transducer cables, and other damaged components.

5 If you find any damaged components, repair or replace them before proceeding.

STC transducers don't require a lot of care and attention. Once installed correctly, you don't need to remove them from the rail for cleaning or readjustment.

6 At trackside, check all transducer-mounting bolts on all tracks to make sure that all transducers are snug against the rail.

Four bolts are needed to hold the transducer in place. Two square-head bolts go through the mounting plate and transducer body. Two hex-head bolts go through the mounting plate and rail. If any of these bolts are sheared or missing, they must be replaced with the correct replacement bolt. Also, if any washers or nuts are missing, they must be replaced.

7 If all transducers aren't snug against the rail, fix this problem before proceeding.

Each installed transducer body should be 1-9/16 inches (3.97 centimeters) below the top of the rail and parallel to it. You can meet this requirement by using the transducer height bracket on the bottom of the alignment fixture.

8 Place the alignment fixture across both rails, centered over each transducer in turn.

9 Check if each transducer body just touches the bracket.

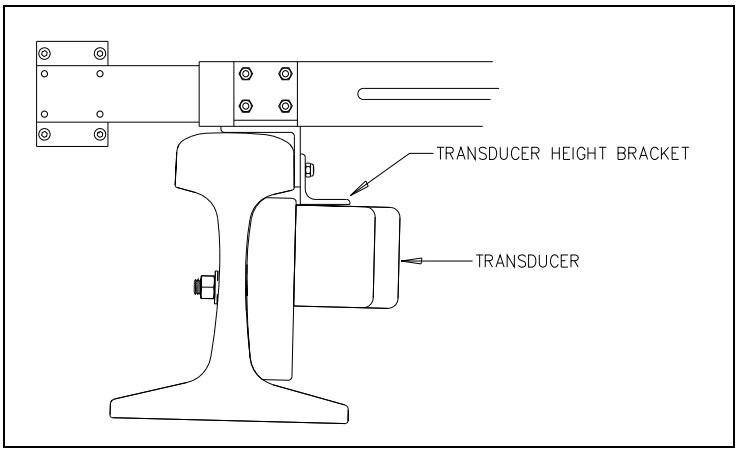

The fixture should be snug against the top and gauge of both rails. This may be impossible if the transducer body is less than 1-9/16 inches (3.97 centimeters) below the top of the rail or if the transducer body isn't parallel to the top of the rail.

10 If a transducer body doesn't just touch the bracket:

- **a** Loosen the nuts holding the transducer body to its mounting plate.
- **b** By sliding it up and down, adjust the transducer body to the proper height.
- **c** Tighten each hex nut with a 9/16-inch torque wrench to a **torque of 12 to 15 foot-pounds (16.3 to 20.3 newton-meters)**.

Don't exceed a torque of 15 foot-pounds (20.3 newton-meters). Doing so can weaken or break a bolt, requiring the bolt to be replaced.

11 At the trackside, check all scanner-mounting bolts on all tracks.

12 If all scanner mounts aren't snug against the gauge side of the rail, fix this problem before proceeding.

13 From under all scanners, remove ballast that could damage the scanner during train passage.

14 Remove all obstructions to the scan path of each scanner.

15 If the wayside enclosure isn't attached to a properly installed outside grounding system, fix this problem before proceeding.

16 At all outlets inside the wayside enclosure, check if the AC power is stable and at least 110 volts at 20 amperes.

17 If the AC power isn't stable or if it isn't at least 110 volts at 20 amperes, fix this problem before proceeding.

18 If not all outlets inside the wayside enclosure are grounded properly, fix this problem before proceeding.

19 If the battery is dead, damaged, or emitting a strong sulfurous odor, replace it before proceeding.

WARNING

In operation, batteries generate and release flammable hydrogen gas, which, if ignited by a burning cigarette, naked flame, or spark, may cause battery explosion with dispersion of casing fragments and corrosive liquid electrolyte. So, carefully follow manufacturer's instructions for installation and service. Keep all sources of gas ignition away from the batteries and do not allow metallic articles to contact the negative and positive terminals of a battery at the same time.

WARNING

A damaged or aged battery, in combination with the connected battery charger, can pose a serious health threat. The battery can produce hydrogen sulfide gas, which is characterized by its unique "rotten egg" smell. So, when a strong sulfurous odor is detected, remove power to the battery charger and check the battery for excessive heating. Do not inhale the fumes.

20 If the battery charger hasn't been properly grounded, fix this problem before proceeding.

21 If the SmartScanNG² enclosure hasn't been properly grounded, fix this problem before proceeding.

There are vents on the top, bottom, and sides of the charger. Blocking any of these vents could result in damage to the charger or battery.

22 Remove anything that is blocking the vents on the battery charger.

One end of the battery temperature probe cable has a three-pin plug, which plugs into a receptacle on the front of the battery charger. The other end, which has a temperature sensor sealed in it, should be attached to the negative battery post. If the battery temperature probe is defective or not installed, the red defective temperature probe LED is lit.

23 On the front of the battery charger, if the red defective-temperature-probe LED is lit, fix the underlying problem before proceeding.

24 Switch the multimeter to the DC volts scale.

The **equipment side** of the fuse block is directly wired to the SmartScanNG² enclosure. The **battery side** of the fuse block is wired to the battery via the distribution block.

25 Touch the leads from the multimeter to the terminals on the equipment side of the fuse block.

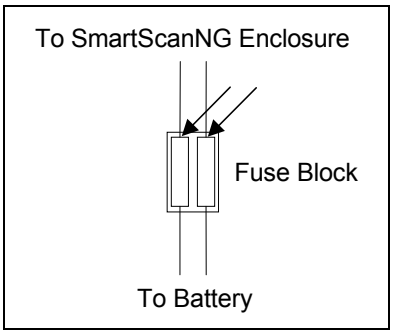

26 If the voltage (on the equipment side of the fuse block) is 12.3-14 VDC (for a 12V system) or 22-28 VDC (for a 24V system), go to step **30**.

27 If voltage (on the equipment side of the fuse block) is 0 VDC:

a Touch the leads to the terminals on the battery side of the fuse block.

b If the voltage (on the battery side of the fuse block) is greater than 0 VDC, replace each fuse in the fuse block with a BAF-25 (25-amp 250-volt) fast-acting fuse and return to step **25**.

c If the voltage (on the battery side of the fuse block) is 0 VDC, fix any wiring problems between the fuse block, the distribution block, the battery, and the charger.

d Return to step **25**.

28 If the voltage is less than 12.3 VDC (for a 12V system) or 22.0 VDC (for a 24V system):

a On the battery charger, check the input voltage switch for proper setting.

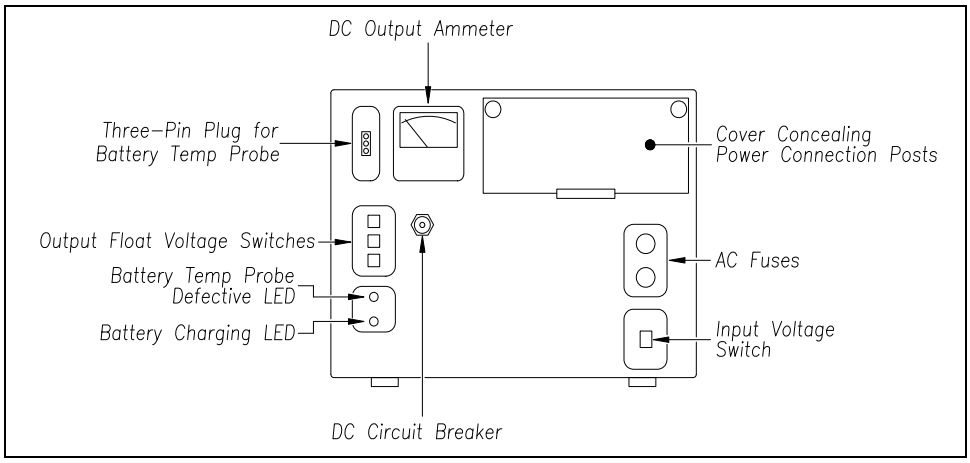

The input voltage switch can be set to 115 VAC or 230 VAC. Use 115 for input voltages between 108 and 128. Use 230 for input voltages between 216 and 256.

b On the battery charger, check the output float voltage switches.

c The factory default is **14.00 VDC** for a 12-volt system and **28.0 VDC** for a 24volt system.

To reset the switches, use a small slotted screwdriver to turn each switch to the desired number.

d Open the small door cover on the top-right corner of the front of the charger.

Do not touch the uninsulated parts of the wires or the charger's binding posts. Doing so could result in sparks, burns, or electric shock.

e Check that all binding post nuts are tight and that all wiring is correct.

f On the battery charger, check the AC fuses to see if either is blown.

g If blown, replace with 4-amp 250-volt fast-acting fuses.

h On the battery charger, check the DC circuit breaker to see if it is open (tripped).

When closed, about 0.09 inch (0.23 centimeters) of the breaker's button is seen. When open, the button is popped out, showing about 0.25 inch (0.64 centimeters).

i If open (tripped), push the breaker's button in to reset the DC circuit breaker.

j Check to see if the battery charger is plugged in.

k If the battery charger isn't plugged in, plug it in.

l Check the battery-charging LED.

If the battery is charging properly, the yellow battery-charging LED is lit solid. If one or more of the output float voltage switches are set between numbers, the yellow battery-charging LED flashes.

m If the yellow battery-charging LED is not lit, call STC for help in fixing this problem.

n If the yellow battery-charging LED is lit solid, monitor the voltage for ten minutes.

If the voltage is gradually increasing, the battery is probably charging. After the battery has charged for five hours, the battery voltage should be very near the float voltage setting. If the voltage isn't gradually increasing, the battery is probably not charging. This may indicate that the battery is defective and should be replaced.

29 If voltage is greater than **28 VDC** (24-volt system) or **14 VDC** (12-volt system):

a Check the output float voltage switches on the center-left edge of the battery charger. They should be set no higher than factory defaults .

b Be sure that each switch is set on a number and not between numbers.

c To reset the switches, use a small slotted screwdriver to turn each switch to the desired number.

30 On the display panel, look at the COP-A and COP-B LEDs.

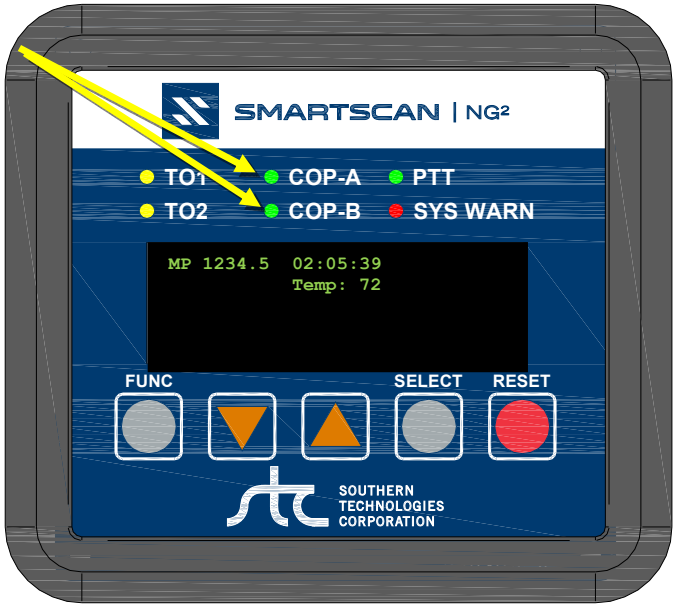

The COP LEDs indicate the condition of the CPUs. If both CPUs are running their programs correctly, their LEDs blink on and off. If a program isn't operating as expected, the LED for the affected CPU is lit solid or isn't lit at all.

31 If either or both of the **COP LEDs** is lit solid or isn't lit at all, call STC for help in fixing this problem.

32 On the display panel, look at the **SYS WARN** LED. If a system warning has been flagged, the SYS WARN LED will be lit and the Check System Health message will be displayed on the bottom text line of the home screen. The Sys. Health Menu provides the status for various system health checks.

33 To see if the system is being activated by the gating transducers:

a Produce a Train Detail Report for the last train.

Section 6.0 - Producing Reports tells how to produce this report.

b On the Train Detail report, check under the System Alarms section of the report for the words "No Approach Track."

The No Approach Track alarm indicates that the track circuit (or the advance transducers) failed to signal the presence of a train and that the SmartScanNG² system started from the train passing over the gating transducers.

c If the words "No Approach Track" don't appear, go to step **37**.

34 If your system uses advance transducers, go to step **36**.

35 If your system uses a track circuit, recalibrate the presence detector board:

a) From the center of the gating transducers, measure the distance you want the track circuit to pick up the presence of a train.

b) The distance must be at least 25’ (7.62 m) and no more than 150’ (45.7 m).

c) At the point just measured, place a 0.06Ω shunt across both rails. The track must be shunted before calibration button is pressed.

d) Remove the SmartScanNG² Controller Module and locate the Zepic III Presence Detector board. Press and HOLD the blue RCVR CAL button until the relay drive LED (next to Cal Button) starts blinking. Release the RCVR CAL button and the LED will stop blinking. The ZEPIC III will automatically begin the calibration process. NOTE: The track shunt MUST remain in place during the calibration process.

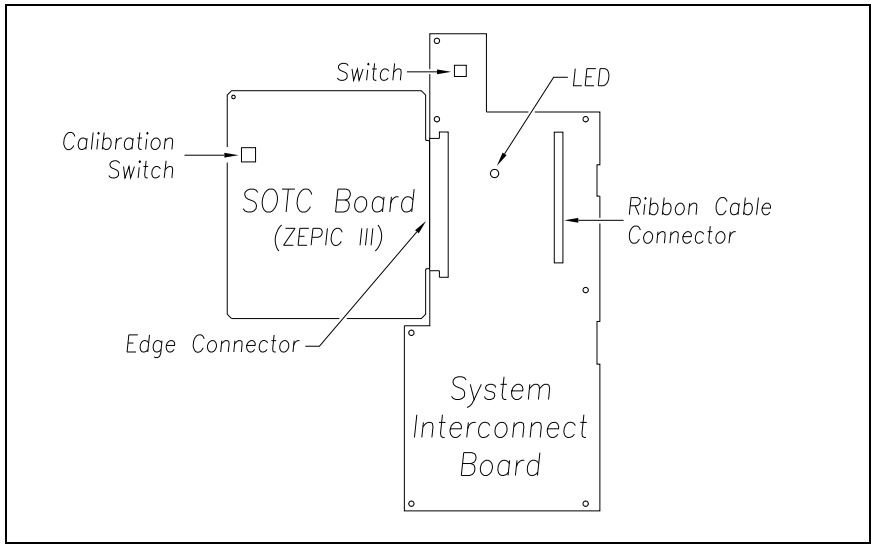

e) The relay drive will pick up (LED on) when the unit has successfully calibrated. This process can take up to 45 seconds to complete.

Verification

a) Lift the shunt, and the relay drive should drop.

b) Move the shunt 10' farther out from the calibration point and verify the relay drive does not pick up.

IMPORTANT:
To ensure an accurate activation point, always place the shunt BEFORE pressing the RCVR CAL button.

If the ZEPIC cannot achieve calibration, it will blink the relay drive LED three (3) times in rapid succession, indicating a calibration error. The unit will continuously repeat the calibration procedure (there is no need to press the blue RCVR CAL button), allowing you to troubleshoot the track circuit, wiring, and battery. Once the issue has been corrected, repeat the calibration procedure.

Because the ZEPIC III is a two-wire system, it will activate an equal distance on both sides of the track feed point.

36 If your system uses advance transducers:

You will next verify that that each advance transducer is functional.

a Using a metal wrench, stroke the top of one of the advance transducers.

The scanner shutters should open completely for 10 seconds.

b On one of the bearing scanners, check to see if the shutter opens.

c If the shutter didn't open, fix this problem before proceeding.

d Wait until the detector times out and closes the shutters. Using a metal wrench, stroke the top of the other advance transducer.

The scanner shutters should open completely for 10 seconds.

e On one of the bearing scanners, check to see if the shutter opens.

f If the shutter didn't open, fix this problem before proceeding.

37 Produce a Train Summary report.

Section 6.0 – Producing Reports tells how to produce this report.

The Train Summary report lists all trains currently stored in the Trains directory. A line of information is shown for each train entry. The report is divided into a header section and a detail section. The header section contains general information about the site. The detail section contains summary information on each train that passed the site.

38 On the Train Summary report, check the Axles column.

Axle count should be an even number. Odd numbered axle counts are possible indications of gating transducer problems.

39 If there is an odd axle count and if train speed was always above 7 mph, go to step **41**.

If at any time during train passage the train speed was less than or equal to 7 mph (11.3 kph), gating transducer problems probably don't exist. If the train speed was always above 7 mph, gating transducer problems probably do exist.

The Very Slow Train alarm indicates that, at some point during train passage, four consecutive axles crossed the gating transducers at a speed of 7 mph (11.3 kph) or less. This alarm appears on a Train Detail report.

If there are many slow trains (that is, many trains traveling less than 7 mph) at this site, it may be necessary to relocate the scanners and other track hardware to a better location. Decisions to do this should be made in consultation with STC. Relocating a site is beyond the scope of this document.

40 If there is an even axle count and the values under "Axles," "T01," and "TO2" are the same, go to step **45**.

If things are working correctly, all three values for a given train should be equal. You'll do the next step only if things aren't working correctly.

41 Determine which gating transducer is recording incorrect information.

Determine which gating transducer is recording incorrect axle counts and whether it is not counting all axles or counting extra ones. You may not be able to do this by just looking at the values under the Axles, TO1, and TO2 columns of the Train Summary report. Sometimes, a transducer problem causes the number in the Axles column to be incorrect. Therefore, the true axle count may have to be determined from an alternate source such as the next detector system that encounters the train with the transducer-count imbalance.

After you determine which gating transducer is miscounting, you'll need to change a jumper setting on the Interface board. If TO1 is the problem, you'll change the setting for J201. If TO2 is the problem, you'll change the setting for J202. If both TO1 and T02 have a problem, both jumpers will need to be changed.

Changes to the jumpers should be made only after all external conditions that cause transducer miscounts have been corrected. Some of these external conditions are improperly installed transducers, loose transducer bolts, incorrect transducer heights, damaged transducers, damaged transducer cables, and loose wiring connections. You should have already checked for and corrected these external conditions in steps **4** through **10** above. If you think the corrections you made in those steps fixes gating transducer miscounting, you can skip some of the steps below.

The process of adjusting the transducer loading is trial and error. Generally, if you are having too many transducer counts, lower the loading resistance to make the transducer less sensitive. Likewise, too few counts suggest that the transducer is not sensitive enough, so you would select a loading value with more resistance.

42 If you corrected all external conditions that negatively affect gating transducers and you think this fixes gating transducer miscounting, go to step **45**.

43 If the selected gating transducer appears to be missing axles (that is, the transducer that is showing a number of hits less than the true axle count):

a Toggle off the DC power switch on the right edge of the SmartScanNG² enclosure.

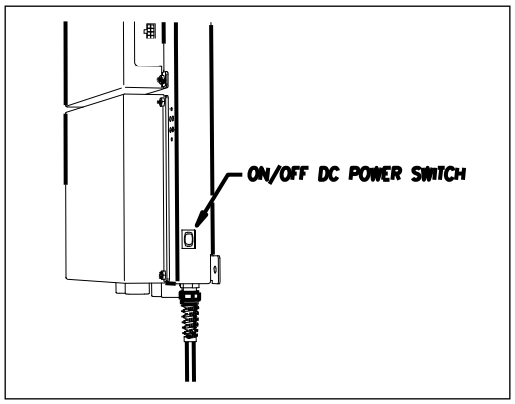

b Remove the six nuts and three screws holding the cover over the Interface board.

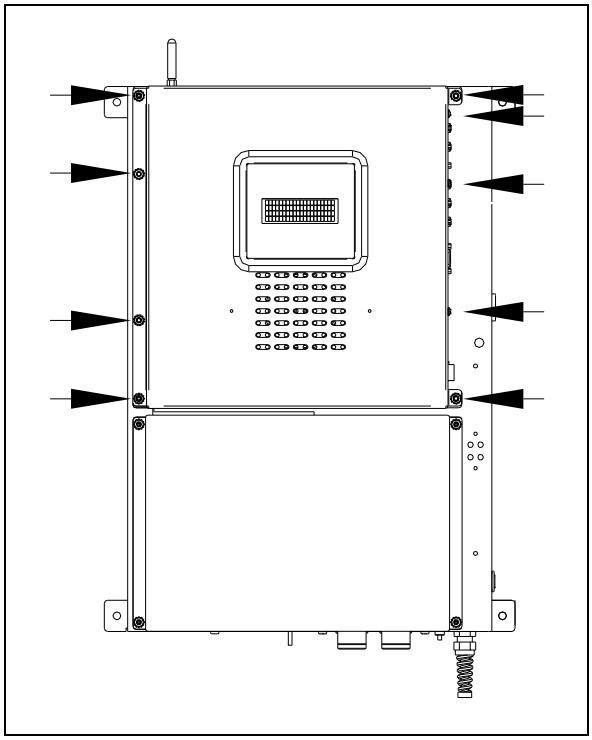

The Interface board is now visible.

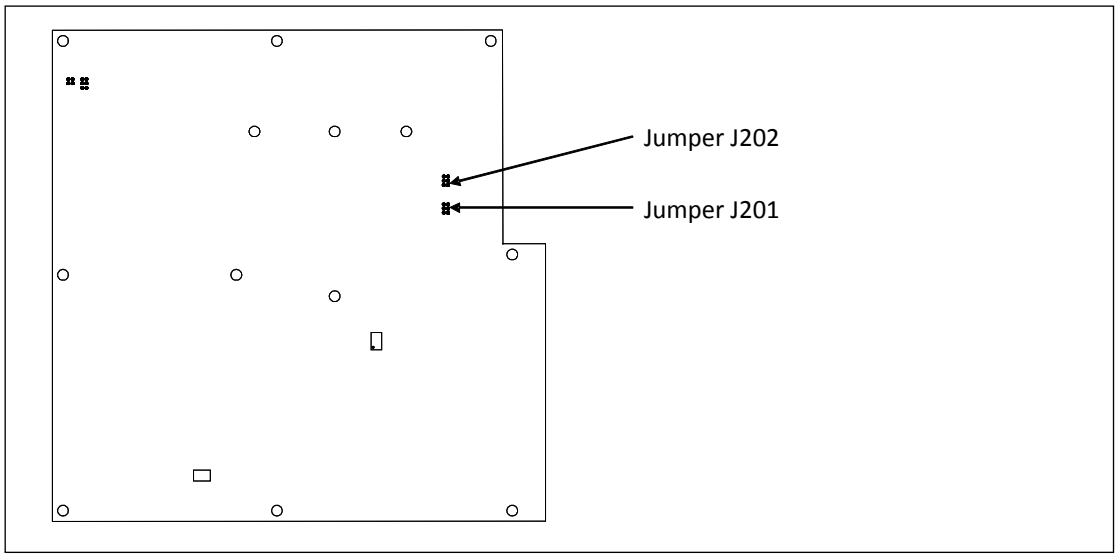

c To prevent the base assembly from falling, replace two of the nuts onto the top two mounting studs on the SmartScanNG² enclosure.

d Store the removed cover, three screws, and remaining four nuts in a safe place until you replace them.

e The table below lists the highest, middle, and lowest sensitivity for transducer loading. Highest is the most sensitive. The jumper's top position is the one closest to the external speaker.

J201 or J202 Jumper Position	Sensitivity Level
Top	Lowest Sensitivity
Center	Middle Sensitivity
Bottom	Highest Sensitivity

f If TO1 is the selected gating transducer and the J201 jumper is currently on the lowest sensitivity position, move it to the middle sensitivity position.

g If TO1 is the selected gating transducer and the J201 jumper is currently on the middle sensitivity position, move it to the highest sensitivity position.

h If TO1 is the selected gating transducer and the J201 jumper is currently on the highest sensitivity position, call STC for help in fixing this problem.

i If TO2 is the selected gating transducer and the J202 jumper is currently on the lowest sensitivity position, move it to the middle sensitivity position.

j If TO2 is the selected gating transducer and the J202 jumper is currently on the middle sensitivity position, move it to the highest sensitivity position.

k If TO2 is the selected gating transducer and the J202 jumper is currently on the highest sensitivity position, call STC for help in fixing this problem.

l Remove the two nuts holding the base assembly to the SmartScanNG² enclosure.

m Using the saved six nuts and three screws, reattach the cover over the Interface board.

n Toggle on the DC power switch on the right edge of the SmartScanNG² enclosure.

44 If the selected gating transducer appears to be counting extra axles (that is, the transducer that is showing a number of hits more than the true axle count):

a Toggle off the DC power switch on the right edge of the SmartScanNG² enclosure.

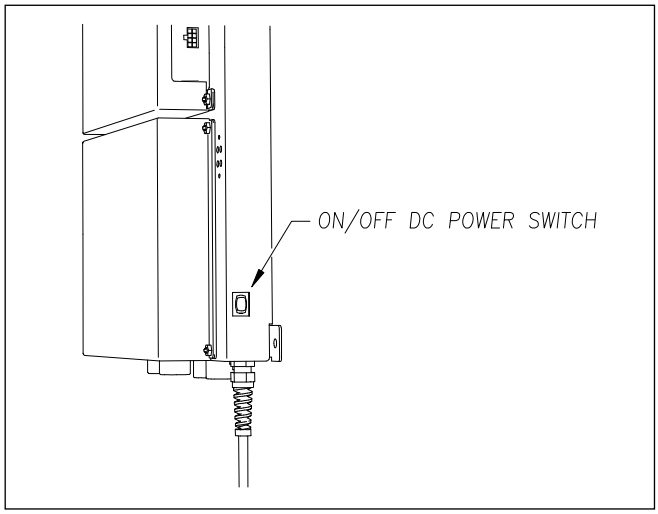

b Remove the six nuts and three screws holding the cover over the Interface board.

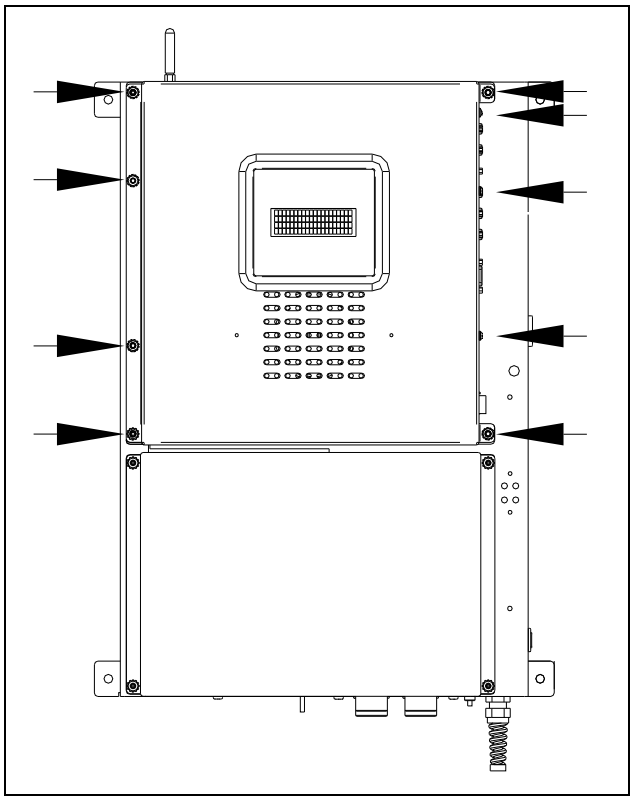

The Interface board is now visible.

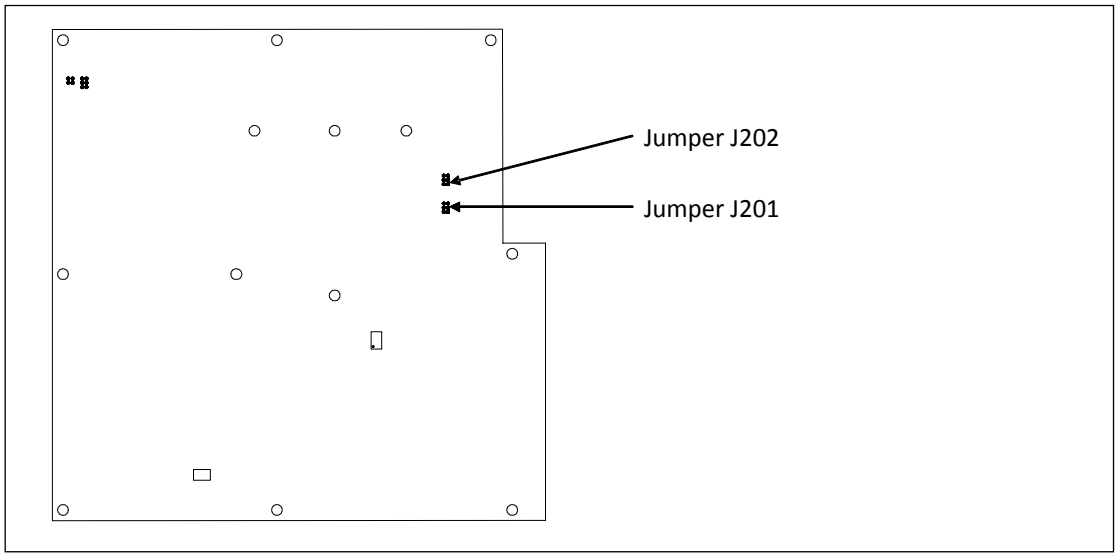

c To prevent the base assembly from falling, replace two of the just removed nuts onto the top two mounting studs on the SmartScanNG² enclosure.

d Store the removed cover, three screws, and remaining four nuts in a safe place until you replace them.

e The table below lists the highest, middle, and lowest sensitivity for transducer loading. Highest is the most sensitive. The jumper's top position is the one closest to the external speaker.

J201 or J202 Jumper Position	Sensitivity Level
Top	Lowest Sensitivity
Center	Middle Sensitivity
Bottom	Highest Sensitivity

f If TO1 is the selected gating transducer and the J201 jumper is currently on the highest sensitivity position, move it to the middle sensitivity position.

g If TO1 is the selected gating transducer and the J201 jumper is currently on the middle sensitivity position, move it to the lowest sensitivity position.

h If TO1 is the selected gating transducer and the J201 jumper is currently on the lowest sensitivity position, call STC for help in fixing this problem.

i If TO2 is the selected gating transducer and the J202 jumper is currently on the highest sensitivity position, move it to the middle sensitivity position.

j If TO2 is the selected gating transducer and the J202 jumper is currently on the middle sensitivity position, move it to the lowest sensitivity position.

k If TO2 is the selected gating transducer and the J202 jumper is currently on the lowest sensitivity position, call STC for help in fixing this problem.

l Remove the two nuts holding the base assembly to the SmartScanNG² enclosure.

m Using the saved six nuts and three screws, reattach the cover over the Interface board.

n Toggle on the DC power switch on the right edge of the SmartScanNG² enclosure.

45 To use the serial interface to open the scanner shutters:

a Using the serial interface, display the Main menu.

Section 4.0 - Serial Interface tells how to display the Main menu

b Select the System Functions Menu

```
System Functions Menu
----------------------------------------
[A] - Radio Test
[B] - Vocabulary Test
[C] - Radio Inhibit
[D] - Start Manual Train
[E] - 1KHz Test Tone
[F] - Auto-Calibration
                  .
                  .
                  .
```

c To open the shutters, select the Auto-Calibration option.

The protective shutters in all scanners should open and stay open for three minutes. This might not be enough time to check and clean the shutters and optics. If that isn't enough time, select this option again.

46 In each scanner, check if its shutter opened.

47 If any shutter didn't open, fix this problem before proceeding.

48 In each scanner, check for dirty optics.

49 If dirty, clean the scanner optics with the supplied lens cleaning kit.

Do not use solvents, ammonia-based cleaning solutions, or isopropyl alcohol on the optics. Use clean water or a mild solution of dishwashing liquid. After the liquid on the optics dries, lightly wipe the optics with a clean dry chamois patch.

50 If the date and time displayed on the top of the System Functions menu are incorrect, fix them before proceeding.

Section 4.0 - Serial Interface tells how to change the date and time.

51 To check the operation of the radio:

a From the System Functions menu, select Radio Test.

During a radio test, the SmartScanNG² system outputs phrases through the speaker and through the radio. Alternatively, you can output a 1kHz test tone instead of phrases. To do this, you would select the 1KHz Test Tone option.

b While listening to the message or tone, look at the display panel.

The PTT LED should be lit.

If this LED isn't lit, the system's ability to send a message or tone to the radio might be inhibited. This can happen when one uses the Radio Inhibit option on the System Functions menu. If the radio is inhibited, the results of this check are invalid.

c If the PTT LED isn't lit and the radio isn't inhibited, call STC for help in fixing this problem.

52 To check the integrity of the speech data:

a Be sure that the speaker has its volume set to an audible level.

b Using the serial interface, display the Main menu.

Section 4.0 - Serial Interface tells how to display the Main menu.

c Select the System Functions menu.

```
SmartSCAN NG2, MP/KP:1234.5, Track:Single
07/21/2017 15:49:39, 28.1V, 89°F
Main Menu
            .
            .
            .
[K] - Event log
[L] - System Functions Menu
[M] - Replay train
[N] - Security Menu
[X] - Exit
```

d From the System Functions menu, select Vocabulary Test

```
System Functions Menu
----------------------------------------
[A] - Radio Test
[B] - Vocabulary Test
[C] - Radio Inhibit
[D] - Start Manual Train
            .
            .
            .
```

This message appears.

```
Vocabulary test started
```

If the system isn't currently making any other voice announcements, it begins the Vocabulary Test announcement. The SmartScanNG² system outputs phrases through the speaker, but not through the radio.

e If you hear nothing or speech that is too garbled to understand, call STC for help in fixing this problem.

53 To generate a test train to check number of axles:

a Quickly stroke the top of each gating transducer with a metal wrench, alternating between TO1 and TO2.

b Repeat step **a** nine more times, for a total of **ten** simulated axles.

c Wait for the system to time out and the shutters to close.

d Produce a Train Detail report for the last train.

Section 6.0 - Producing Reports tells how to produce this report.

e On the report, check that the number of axles agrees with the number of times that you stroked the gating transducers.

f On the report, if the number of axles doesn't agree with the number of times that you stroked the gating transducers, call STC for help in fixing this problem.

54 To generate a test train to check for hot bearings:

STC recommends that you use the calibrated heat source (2100-810NG) only when the outside (ambient) temperature is above 0°F (-18°C) and below 90°F (32°C). If you must use it at other times, do so only when the needle is centered on the front of the temperature meter. If the needle isn't stabilized within ± 2 degrees of set point, the heat source isn't operating properly.

a Ready the calibrated heat source.

The heat source has reached operating temperature and stabilized when the temperature meter needle remains centered.

b With the power cord to the front of the scanner, place the calibrated heat source on the bearing scanner that is on the rail with the gating transducers.

c Quickly stroke the top of each gating transducer with a metal wrench, alternating between TO1 and TO2 for a total of **six** simulated axles.

You should hear the real-time defect message. No matter how many defects are found, the real-time defect message is only announced once.

d Wait for the system to time out, which normally takes about 10 seconds.

You should hear an end-of-train message with three Hotbox alarms. Per train, only the first three Hotbox alarms are ever announced.

e Listen to be sure that the Hotbox alarms are announced and that they are announced for the correct side.

If you do not hear anything, no alarm-level heat was recorded. No measurable heat from a bearing scanner may be due to loose connections, a scanner not being connected to the bottom of the SmartScanNG² enclosure, a defective shutter motor in the scanner, or a damaged scanner.

f If you do not hear any Hotbox alarms being announced, fix this problem before proceeding.

g If the Hotbox alarms are announced for the wrong side, switch the bearing scanner connections on the bottom of the SmartScanNG² enclosure.

h Repeat the test, this time placing the calibrated heat source on the bearing scanner on the opposite rail

i Verify the results as before.

If the results are correct, your system should function properly when scanning the bearings of real trains.

j Remove the calibrated heat source.

k Store the calibrated heat source and its cable in the wayside enclosure.

55 On the Train Summary report, check the column marked "Average."

For each train, the values in the two columns under this heading should be within four degrees of each other.

56 If the columns aren't within four degrees and if the scanner optics are clean, recalibrate and realign the scanner.

Appendix E & F - Calibration of Type II/Type III Scanners tells how to calibrate the scanners.

57 On the Train Summary report, check the last column of the report.

The last column shows the battery voltage at the time each train passed the site. It should show values between 13.0 and 14.5 volts (12V system) or between 25.0 and 28.0 volts (24V system). Values outside this range may be caused by:

- No AC power for an extended period
- Improperly adjusted float voltage
- Defective battery
- Blown fuses
- Defective battery charger

58 If the most recent value isn't in within the normal range, investigate and fix any problems before proceeding.

59 If this is a double-track site, repeat steps **18** through **59** for the other track (that is, for the other SmartScanNG² system).

9.0 Customer Service

At STC, the customer is number one. STC is committed to products that work and customers that are satisfied. Nothing less is acceptable. This section tells how to get answers for questions, fixes for problems, and parts for spares.

9.1 Reaching STC

You can reach STC by mail, telephone, fax, and email. By mail, you can reach STC at:

Southern Technologies Corporation
6145 Preservation Drive
Chattanooga, Tennessee 37416-3638
USA

Mail and shipments are replied to as soon as possible, normally within one working day. Equipment repair usually takes longer.

By telephone, you can reach STC at 423-892-3029, Monday through Friday, from 8:00 a.m. until 5:00 p.m. Eastern time. After business hours, a machine answers the calls. These calls are returned promptly the next business day. By fax, you can reach STC at 423-499-0045. The fax machine can receive faxes at all times. Faxes are replied to as soon as possible, normally within one working day. By email, you can reach STC at stcemail@southern-tech.com. Email is replied to as soon as possible, normally within one working day.

9.2 Returning Equipment for Repair

Return any defective or malfunctioning equipment to STC for repair or replacement. You don't need a return authorization number. You don't even need to make a telephone call first. Just ship it directly to the **Repair Department** at the address above.

With the returned equipment, include:

- Complete address of where the equipment is to be returned.
- Name and telephone number of person who should be contacted to answer questions about the equipment.
- Written explanation of the equipment defect or malfunction.
- Any reports or other data that would be helpful in diagnosing the problem.
- If out of warranty, credit card number (to be charged) with its expiration date.

9.3 Reporting Problems or Suggestions

If you have any problems, suggestions, or questions related to STC equipment, telephone the **Engineering Department** at the telephone number above. When calling, state the equipment you're calling about. Your call will then be directed to the right person.

9.4 Ordering Spare Parts

If you need any spare parts to support STC equipment, telephone or fax the **Sales Department** at the telephone numbers above.

When calling, state that you're calling to order parts. Your call will then be directed to the right person. When placing the order, reference the STC part numbers listed in this guide. However, if you don't have the part numbers, the sales staff can obtain them for you and provide you with current pricing and availability.

When emailing or faxing, include:

- Purchase Order Number for the order <u>or</u> credit card number (to be charged) with its expiration date.
- Complete address where the parts are to be shipped.
- Complete address where the invoice is to be mailed.
- Name and telephone number of the person who should be contacted to answer questions about the order.
- For each item ordered, part number, complete description, and quantity needed.

9.5 Checking on Shipments and Orders

If you need to check on the status of any shipment or order, telephone or fax the **Sales Department** at the telephone numbers above.

When calling, state that you're checking the status of a shipment or order. Your call will then be directed to the right person. Have your Purchase Order Number ready when you call. However, if you don't have the order number, the sales staff can locate your order number and provide you with the status of the shipment or order.

When emailing or faxing, include:

- Purchase Order Number for the shipment or order being checked.
- Name and telephone number of the person who should be contacted after the order status is checked.
- Your fax number, if available.

Appendix A
System Alarms

This appendix describes the conditions and events that the SmartScanNG² system flags as System Alarms. These alarms provide data about passing trains and system status. These alarms are listed under the System Alarms section of the Train Detail and Exception Detail reports. ***Section 6.0 - Producing Reports*** tells how to produce these reports. Some System Alarms depend on Setup parameters. **Section 4.0 - Serial Interface** tells how to view or change the Setup parameters through the Serial Interface. **Section 5.0 Web/WiFi User Interface** tells how to print reports and view or change Setup parameters through the web interface.

A.1 AC Power Off Alarm

The AC Power Off alarm indicates that AC power wasn't on when it was checked during the end-of-train processing. This alarm doesn't say anything about any lack of power during train passage.

A.2 Advance Turn-On Failure Alarm

The Advance Turn-On Failure alarm indicates that the system's presence detection hardware (that is, the track circuit or the advance transducers) didn't detect the arrival of the train at the site. Instead, the system started the train scanning process when a gating transducer sensed the train.

The arrival speed of the train must be at least 10 mph (16 kph) to generate an Advance Turn-On Failure alarm.

NOTE: This alarm is suppressed if the Presence Hardware or Advance Transducer setting is set to "No" in the Equipment Setup submenu.

A.3 AEI Subsystem Alarms

The **AEI Subsystem: No Tags Antenna-1** or **No Tags Antenna-2** alarm indicates that no AEI tags were read by that specific antenna.

The **AEI Subsystem: No Tags** alarm indicates that no AEI tags were read by either antenna. If you get the "AEI Subsystem: No Tags" string in the System Alarm section of the Train Detail report, you will not get either of "AEI Subsystem: No Tags Ant 0" or "AEI Subsystem: No Tags Ant 1" System Alarms.

The **AEI Subsystem: Not Responding** alarm indicates that there is no response when the NG² sends commands to the AEI reader.

A.4 Ambient Temperature Probe Unreliable Alarm

The Ambient Temperature Probe Unreliable alarm indicates that the temperature probe is giving unreliable readings.

A.5 Blind Pyro Alarm

The Blind Pyro alarm indicates that an object may have blocked a scanner for at least 30 axles during train passage. If 30 or more consecutive axles have a bearing temperature of less than 3°F (1.6°C) on one side and greater than 19°F (10°C) on the opposite side, the scanner on the 3°F side is declared as having a "blind" pyrometer.

There is a different Blind Pyro alarm for each rail. That is, there is a Blind North Pyro alarm and a Blind South Pyro alarm (or, depending on track direction, a Blind East Pyro alarm and a Blind West Pyro alarm).

A.6 Cold Rail Alarm

The Cold Rail alarm indicates that the temperatures of all bearings (of the train) on the designated rail were below a given temperature. When no bearing on a given rail generates a delta temperature reading greater than or equal to the temperature set by the **Cold Journal Temp option** on the Alarm Settings menu, the system generates a Cold Rail alarm.

There is a different Cold Rail alarm for each rail. That is, there is a Cold North Rail alarm and a Cold South Rail alarm (or, depending on track direction, a Cold East Rail alarm and a Cold West Rail alarm).

The **maximum number** (per railside) of consecutive trains, having Cold Rail alarms, allowed before generating a Successive Cold Rails Exceeded alarm is set by the **Cold Journal Counter option** on the Alarm Settings menu. The Successive Cold Rails Exceeded alarm is covered in the next appendix.

A.7 Cold Resistor Alarm

A resistor is mounted to the inside of the bearing scanner's shutter. A voltage is applied to this resistor while the shutter is open, causing it to heat up. After a train has left a site and the shutters have closed, the temperature of the resistor is read by the scanner pyrometer. In this way, a check of the system's ability to read heat correctly is made. The Cold Resistor alarm indicates that the **minimum value** expected for the temperature of the resistor wasn't met. This minimum value is determined by the firmware and is dependent upon the time it takes a train to pass a site.

If the **minimum value** wasn't met, a second check compares the recorded resistor temperature against the limit that was established using the **Absolute option** on the Alarm Settings menu. (This alarm limit is an offset, in degrees Fahrenheit, above the ambient temperature.) If the recorded resistor temperature meets or exceeds the absolute -alarm limit, the firmware cancels any previously flagged Cold Resistor alarms.

There is a different Cold Resistor alarm for each rail. That is, there is a Cold North Resistor alarm and a Cold South Resistor alarm (or, depending on track direction, a Cold East Resistor alarm and a Cold West Resistor alarm).

After a train has passed the site, a more accurate *required* resistor value will be calculated, taking into account the ambient temperature. This new value is then used to calculate a correction factor. The factor is the percentage difference between the *required* resistor value and the value that was actually read. For example, if the *required* resistor temperature is 180 and the actual resistor temperature is 135 the correction factor would be 25% (1 - (135 / 180) = 0.25).

If the correction factor is less than 26%, no Cold Resistor alarm is generated.

If Cold Resistor Alarm conditions are met, two additional checks will be performed. Either of these checks can generate a Cold Resistor alarm. For more information on these checks, see ***A.13 Rail Resistor Test Overridden Alarm***.

The **maximum number** (per railside) of consecutive trains, having Cold Resistor alarms, allowed before generating a Successive Cold Resistors Exceeded alarm is set by the **Cold Resistor Counter option** on the Alarm Settings menu. **Successive Cold Resistors Exceeded** alarms are covered in the next appendix.

A.8 Cold Wheel Scanner Resistor Alarm

The Cold Wheel Scanner Resistor alarm represents the wheel scanner's equivalent of the bearing scanner's Cold Resistor alarm. Evaluation of Cold Wheel Scanner Resistor alarm mimics the same logic used in the evaluation of Cold Resistor alarms. In this way, the system confirms the scanner's ability to read alarm level heat. Just like Cold Resistor alarms, separate Cold Wheel Scanner Resistor alarms exist for each railside.

After a train has passed the site, a more accurate *required* resistor value will be calculated, taking into account the ambient temperature. This new value is then used to calculate a correction factor. The factor is the percentage difference between the *required* resistor value and the value that was actually read. For example, if the *required* resistor temperature is 180 and the actual resistor temperature is 135 the correction factor would be 25% (1 - (135 / 180) = 0.25).

If the correction factor is less than 26%, no Cold Wheel Scanner Resistor alarm is generated.

If Cold Resistor Alarm conditions are met, two additional checks will be performed. Either of these checks can generate a Cold Wheel Scanner Resistor alarm. For more information on these checks, see ***A.19 Wheel Resistor Test Overridden Alarm***.
The **maximum number** (per railside) of consecutive trains, having Cold Wheel Scanner Resistor alarms, allowed before generating a Successive Cold Wheel Resistors Exceeded alarm is set by the **Cold Resistor Counter option** on the Alarm Settings menu. Successive Cold Wheel Resistors Exceeded alarms are covered in the next appendix.

A.9 Efficiency Test Panel in Use Alarm

The Efficiency Test Panel in Use alarm indicates that someone used the Efficiency Test panel to generate a train alarm.

A.10 Equal Heats Test Failed Alarm

The Equal Heats Test Failed alarm indicates lower than expected heat readings from one railside. The firmware uses the average temperatures for rail1 and rail2 and calculates a percentage difference between them, flagging an alarm if this difference exceeds a predetermined alarm limit. The percentage difference between the two average rail temperatures is calculated using the formula **(b-a)/a*100**, where the variable 'a' represents the lower average rail temperature, and the variable 'b' represents the higher average rail temperature. As an example, for recorded average rail temperatures of 40 and 60 degrees, the calculated percentage difference would be 50% (60-40=20, 20/40*100=50). The alarm limit is 100% and isn't user configurable.

The **maximum number** of consecutive trains, having Equal Heats Test Failed alarms, allowed before generating a Max Equal Heat Test Failures Exceeded alarm is set by the **Cold Journal Counter** option on the Alarm Limits submenu. Max Equal Heat Test Failures Exceeded alarms are covered in the next appendix.

A.11 Highrange Transducer Miscounts Alarm

The Highrange Transducer Miscounts alarm indicates that the transducer counts for TO1 and TO2 differ by seven or more. This calculation is made after each axle crosses both gating transducers.

The Highrange Transducer Miscounts alarm <u>can</u> <u>be</u> <u>either</u> a System Alarm or an Integrity Failure, depending on the presence of a Very Slow Train alarm. If a highrange transducer miscount occurs on a train that also contains a Very Slow Train alarm, the firmware treats the miscount condition as a System Alarm. This logic assumes that the train's slow rate of travel likely caused the transducer miscount condition. If a highrange transducer miscount occurs on a train that does not also contain a Very Slow Train alarm, the firmware treats the miscount condition as an Integrity Failure.

A.12 Integrity Failure Alarm

The Integrity Failure alarm indicates that the SmartScanNG² system determined that a condition exists that could prevent proper scanning of a train. In other words, this alarm indicates the existence of one or more conditions in which the integrity of the system and its ability to record train data accurately may be compromised. These unusual conditions, called Integrity Failures, may require train stoppage, later maintenance, or both. They are covered in the next appendix.

A.13 Low Battery Alarm

For 24 VDC Systems:
The **Low Battery alarm** indicates a float voltage of at least 18.0 volts, but less than 22.0 volts on the standby batteries. (The **Dead Battery alarm** indicates a float voltage of less than 18.0 volts, on the standby batteries.)

For 12 VDC Systems:
The **Low Battery alarm** indicates a float voltage of at least 11.8 volts, but less than 12.6 volts, on the standby battery. (The **Dead Battery alarm** indicates a float voltage of less than 11.8 volts on the standby battery).

A.14 Midrange Transducer Miscounts Alarm

The Midrange Transducer Miscounts alarm indicates that the transducer counts for TO1 and TO2 differ by five or six. This calculation is made after each axle crosses both gating transducers.

The Midrange Transducer Miscounts alarm can be either a System Alarm or an Integrity Failure, depending on the presence of a Very Slow Train alarm. If a midrange transducer miscount occurs on a train that also contains a Very Slow Train alarm, the firmware treats the miscount condition as a System Alarm. This logic assumes that the train's slow rate of travel likely caused the transducer miscount condition. If a midrange transducer miscount occurs on a train that does not also contain a Very Slow Train alarm, the firmware treats the miscount condition as an Integrity Failure.

A.15 Presence Detected On Adjacent Track Alarm

This alarm indicates that train presence was detected on an adjacent track. Both tracks must have AEI enabled to generate the alarm.

A.16 Pyrometer Noise Filtered Rail Alarm

The Pyrometer Noise Filtered Rail alarm indicates that a pyrometer in a bearing scanner might be becoming unreliable.

There is a different Pyrometer Noise Filtered Rail alarm for each rail. That is, there is a Pyrometer Noise Filtered North Rail alarm and a Pyrometer Noise Filtered South Rail alarm (or, depending on track direction, a Pyrometer Noise Filtered East Rail alarm and a Pyrometer Noise Filtered West Rail alarm).

A.17 Pyrometer Noise Filtered Wheel Alarm

The Pyrometer Noise Filtered Wheel alarm indicates that a pyrometer in a wheel scanner might be becoming unreliable.

There is a different Pyrometer Noise Filtered Wheel alarm for each rail. That is, there is a Pyrometer Noise Filtered North Wheel alarm and a Pyrometer Noise Filtered South Wheel alarm (or, depending on track direction, a Pyrometer Noise Filtered East Wheel alarm and a Pyrometer Noise Filtered West Wheel alarm).

A.18 Rail Resistor Test Overridden Alarm

During the post-train resistor test, if a read resistor value isn't greater than 76% of the required resistor value, two additional checks will be performed. The average heats for both bearings are tested against the value set by the **Res Test Minimum Rail Av** option on the Alarm Settings (Advanced) menu.

If the average heats are less than the value set by the **Res Test Minimum Rail Av** option, the system generates a Cold Resistor alarm.

If the average heats are greater than or equal to this value, bearing temperatures are compared on an axle-by-axle basis. This second check determines if more than half of the temperatures read by the bearing scanner with the low-read resistor value are 70% or less than the temperatures read by the other bearing scanner on the same axle. If 50% or more of the axles are low, a Cold Resistor alarm is flagged. If not, a Cold Resistor alarm isn't flagged, but a Rail Resistor Test Overridden alarm is. Both of these tests have to be met to flag a Rail Resistor Test Overridden Alarm.

There is a different Rail Resistor Test Overridden alarm for each rail. That is, there is a North Rail Resistor Test Overridden alarm and a South Rail Resistor Test Overridden alarm (or, depending on track direction, an East Rail Resistor Test Overridden alarm and a West Rail Resistor Test Overridden alarm).

A.19 Reverse Direction Detected Alarm

Trains that are being scanned correctly will have axles whose on times (that is, the time during which an axle passed between the gating transducers) are less than their off times (that is, the time during which no axle passed between the gating transducers). For each axle of a passing train (except for the first axle), the system checks for an on time that is greater than the off time. If the axle's on time is greater than its off time, the system reverses the direction locked-in by the first gating pulse, reverses the opening and closing gate assignment for TO1 and TO2, and generates a false transducer pulse. The system considers the gate active for the next axle at the time it determines the current axle's opening gate pulse was missed.

The Reverse Direction Detected alarm indicates that the system entered a state where it is scanning for bearing temperatures when the axles are outside the scanning gate. In this state, the transducer that should be opening the scanning gate is considered by the system to be the transducer that is closing the gate. Likewise, the transducer that should be closing the scanning gate is considered the transducer that is opening the gate.

A.20 Short Train Alarm

The Short Train alarm indicates that a train had fewer than 50 axles.

A.21 Stuck Dragger Recovered Alarm

The Stuck Dragger Recovered alarm indicates that a stuck dragger was detected during train passage and, at some point later, the dragging-equipment detector returned to its neutral position for at least eight consecutive Dragger-free axles.

A.22 Test Train Alarm

The Test Train alarm indicates that a given train was generated by the SmartScanNG² system. These trains are used for testing purposes and do not represent actual trains passing the site.

A.23 Successive Cold Wheel Resistors Exceeded Alarm

The Successive Cold Wheel Resistors Exceeded alarm indicates that at least a preset maximum number of consecutive trains, all having Cold Wheel Scanner Resistor alarms on the same railside, have passed a site. The user determines the number of consecutive trains used in the comparison through the **Cold Res Counter option** on the Alarm Settings menu.

A.24 Wheel Resistor Test Overridden Alarm

During the post-train resistor test, if a read resistor value isn't greater than 76% of the required resistor value, two additional checks will be performed. The average heats for both wheels are tested against the value set by the **Res Test Minimum Wheel Av** option on the Alarm Settings (Advanced) menu.

If the average heats are less than the value set by the **Res Test Minimum Wheel Av** option, the system generates a Cold Wheel Scanner Resistor alarm.

If the average heats are greater than or equal to this value, wheel temperatures are compared on an axle-by-axle basis. This second check determines if more than half of the temperatures read by the wheel scanner with the low-read resistor value are 70% or less than the temperatures read by the other wheel scanner on the same axle. If 50% or more of the axles are different, a Cold Wheel Scanner Resistor alarm is flagged. If not, a Cold Wheel Scanner Resistor alarm isn't flagged, but a Wheel Resistor Test Overridden alarm is. Both of these tests have to be met to flag a Wheel Resistor Test Overridden Alarm.

There is a different Wheel Resistor Test Overridden alarm for each rail. That is, there is a North Wheel Resistor Test Overridden alarm and a South Wheel Resistor Test Overridden alarm (or, depending on track direction, an East Wheel Resistor Test Overridden alarm and a West Wheel Resistor Test Overridden alarm).

Appendix B
Integrity Failures

This appendix describes the conditions and events that the SmartScanNG² system flags as Integrity Failures. These alarms indicate conditions in which the integrity of the system, and its ability to record train data accurately, may be compromised. These alarms are listed under the Integrity Failures section of the Train Detail and Exception Detail reports. ***Section 6.0 - Producing Reports*** tells how to produce these reports. Some Integrity Failures depend on Setup parameters. ***Section 4.0 - Serial Interface*** tells how to view or change the Setup parameters through the Serial Interface. **Section 5.0 Web/WiFi User Interface** tells how to print reports and view or change Setup parameters through the web interface.

B.1 Dead Battery Alarm

For 24 VDC Systems:
The **Dead Battery alarm** indicates a float voltage of less than 18 volts on the standby batteries. (The **Low Battery alarm** indicates a float voltage of at least 18 volts, but less than 22 volts, on the standby batteries.)

For 12 VDC Systems:
The **Dead Battery alarm** indicates a float voltage of less than 11.8 volts on the standby battery. (The **Low Battery alarm** indicates a float voltage of at least 11.8 volts, but less than 12.6 volts, on the standby battery.)

B.2 Dead Resistor Alarm

The bearing scanner's Dead Resistor Alarm indicates the presence of two separate conditions. First, the train must contain a Cold Rail alarm on a given rail. Second, the recorded temperature for the bearing scanner's resistor on that rail must fall below the value set by the **Cold Journal Temperature option** on the Alarm Settings menu

There is a different Dead Resistor alarm for each rail. That is, there is a Dead North Resistor alarm and a Dead South Resistor alarm (or, depending on track direction, a Dead East Resistor alarm and a Dead West Resistor alarm).

B.3 Highrange Transducer Miscounts Alarm

The Highrange Transducer Miscounts alarm indicates that the transducer counts for TO1 and TO2 differ by seven or more. This calculation is made after each axle crosses both gating transducers.

The Highrange Transducer Miscounts alarm can be either a System Alarm or an Integrity Failure, depending on the presence of a Very Slow Train alarm. If a highrange transducer miscount occurs on a train that also contains a Very Slow Train alarm, the firmware treats the miscount condition as a System Alarm. This logic assumes that the train's slow rate of travel likely caused the transducer miscount condition. If a highrange transducer miscount occurs on a train that does not also contain a Very Slow Train alarm, the firmware treats the miscount condition as an Integrity Failure.

B.4 Max Equal Heat Test Failures Exceeded Alarm

The Max Equal Heat Test Failures Exceeded alarm indicates that at least a preset **maximum number** of consecutive trains, all having Equal Heats Test Failed alarms, have passed a site. The **maximum number** of consecutive trains, having Equal Heats Test Failed alarms, allowed before generating an Integrity Failure alarm is set by the **Cold Journal Counter** option on the Alarm Settings submenu.

B.5 Maximum Exception Alarms Exceeded Alarm

Exception Alarms are associated with axles. There are 8 types. They are the Absolute, Carside Slope, Differential, Dragging-Equipment, High-Load, Hotwheel, Pyrometer Saturation, and Wide-Load.

The Maximum Exception Alarms Exceeded alarm is generated when the maximum number of Exception Alarms is exceeded on a single train. This maximum number is defined by the **Max Alarms option** on the Alarm Settings (Advanced) submenu.

B.6 Midrange Transducer Miscounts Alarm

The Midrange Transducer Miscounts alarm indicates that the transducer counts for TO1 and TO2 differ by five or six. This calculation is made after each axle crosses both gating transducers.

The Midrange Transducer Miscounts alarm can be either a System Alarm or an Integrity Failure, depending on the presence of a Very Slow Train alarm. If a midrange transducer miscount occurs on a train that also contains a Very Slow Train alarm, the firmware treats the miscount condition as a System Alarm. This logic assumes that the train's slow rate of travel likely caused the transducer miscount condition. If a midrange transducer miscount occurs on a train that does not also contain a Very Slow Train alarm, the firmware treats the miscount condition as an Integrity Failure.

B.7 Pre-train Stuck Dragger Alarm

The Pretrain Stuck Dragger alarm indicates that between the time of first receiving a pulse from the track circuit (or the advance transducers) and the time of first receiving a pulse from either gating transducer, the SmartScanNG² system detected an open circuit from the dragging-equipment detector.

B.8 Pre-train Stuck High-Load Detector Alarm

The Pre-train Stuck High-Load Detector alarm indicates that between the time of first receiving a pulse from the track circuit (or the advance transducers) and the time of first receiving a pulse from either gating transducer, the SmartScanNG² system detected an open circuit from the high-load detector.

B.9 Spike Event

A Spike Event occurs when the detector records less than four axles but the TO1 or TO2 spike counts exceed four. For example, a train enters the site and fires both transducers (recording one axle), then something takes out the TO1 transducer, leaving only TO2 firing. Each of these hits on TO2 count as spikes (consecutive hits on a given transducer). After the train leaves, the detector has recorded less than four axles (one axle in this case) and counted more than four spikes for a transducer.

B.10 Stuck Dragger During Train Passage Alarm

The Stuck Dragger During Train Passage alarm indicates that a maximum number of consecutive axles had Dragging-Equipment alarms during train passage. The maximum number is defined by the Max Alarms option of the Alarm Settings (Advanced) submenu.

B.11 Pre-train Stuck Wide-Load Detector Alarm

The Pre-train Stuck Wide-Load alarm indicates that between the time of first receiving a pulse from the track circuit (or the advance transducers) and the time of first receiving a pulse from either gating transducer, the SmartScanNG² system detected an open circuit from a wide-load detector.

There is a different Pre-train Stuck Wide-Load alarm for each rail. That is, there is a Pre-train Stuck Wide-Load North Side alarm and a Pre-train Stuck Wide-Load South Side alarm (or, depending on track direction, a Pre-train Stuck Wide-Load East Side alarm and a Pre-train Stuck Wide-Load West Side alarm).

B.12 Successive Cold Rails Exceeded Alarm

The Successive Cold Rails Exceeded alarm indicates that at least a preset maximum number of consecutive trains, all having Cold Rail alarms on the same railside, have passed a site. The maximum number (per railside) of consecutive trains having Cold Rail alarms allowed before generating an Integrity Failure alarm is set by the **Cold Journal Counter** option on the Alarm Settings menu.

Under normal circumstances, Cold Rail conditions represent System Alarms, not Integrity Failures. However, if the number of consecutive trains bearing the same Cold Rail alarm <u>equals or exceeds</u> the **Cold Journal Counter**, this condition becomes an Integrity Failure.

B.13 Successive Cold Resistors Exceeded Alarm

The Successive Cold Resistors Exceeded alarm indicates that at least a preset maximum number of consecutive trains, all having Cold Resistor alarms on the same railside, have passed a site. The maximum number (per railside) of consecutive trains having Cold Resistor alarms allowed before generating an Integrity Failure alarm is set by the **Cold Resistor Counter option** on the Alarm Settings menu.

Under normal circumstances, Cold Resistor conditions represent System Alarms, not Integrity Failures. However, if the number of consecutive trains bearing the same Cold Resistor alarm equals or exceeds the **Cold Res Counter** option, this condition becomes an Integrity Failure.

B.14 Train Present on Restart Alarm

The Train Present on Restart alarm indicates that a train was present at the site when the system was starting up.

B.15 Very Slow Train Alarm

The Very Slow Train alarm indicates that, at some point during train passage, four consecutive axles crossed the gating transducers at a speed of 7 mph (11.3 kph) or less.

Appendix C
Replacement of Type II Scanners

There are Type II bearing scanners and Type II wheel scanners. Both contain two major parts. The top part is the cover-and-module assembly. The module and its protective cover are tightly integrated and rarely should be taken apart. Except for the addition of a plastic attenuation plug on the wheel scanner cover, both types of cover-and-module assemblies are identical and can be used interchangeably. The bottom part is the mount. Bearing scanner mounts and wheel scanner mounts are different in design. They can't be interchanged.

This appendix tells how to replace scanner cover-and-module assemblies. Replacement of scanner mounts isn't covered in this guide.

C.1 Bearing Scanners

The figure below shows the major parts of a Type II bearing scanner.

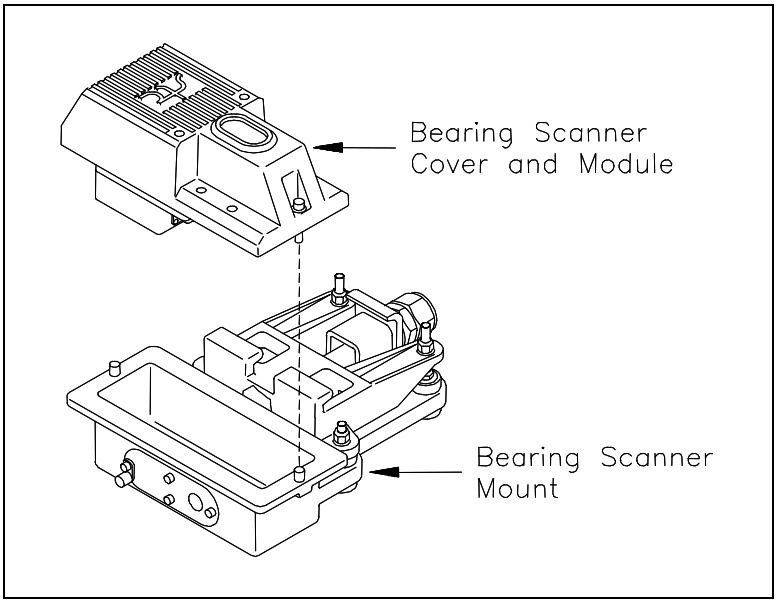

To replace a Type II bearing scanner cover-and-module assembly:

1. Be sure that you have on hand a new scanner cover-and-module assembly.
2. Be sure that you have on hand a T-handle 1/4-inch hex-wrench.
3. Turn off all power to the SmartScanNG² enclosure.
4. Using a T-handle 1/4-inch hex-wrench, loosen both socket-head-cap screws on the cover of the bearing scanner.

5 Separate the scanner cover-and-module assembly from its mount.

6 Disconnect the scanner cable connector from the scanner box connector.

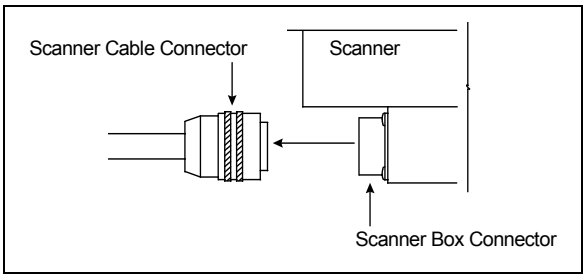

7 Store the removed scanner cover-and-module assembly in a safe place until you return it to STC for repair.

8 Attach the scanner cable connector to the scanner box connector (on the new scanner cover-and-module assembly).

9 With the hole (on top of the scanner cover) facing north or east, replace the scanner cover-and-module assembly onto its mount.

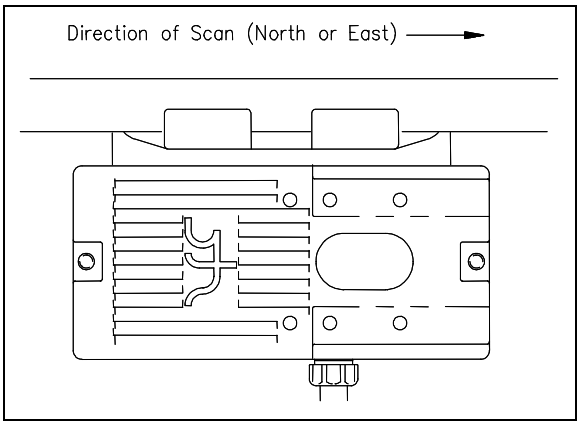

10 Using a T-handle 1/4-inch hex-wrench, tighten the two screws (on the scanner cover) until they are completely tight.

11 Turn on power to the SmartScanNG² enclosure.

C.2 Wheel Scanners

The figure below shows the major parts of a Type II wheel scanner.

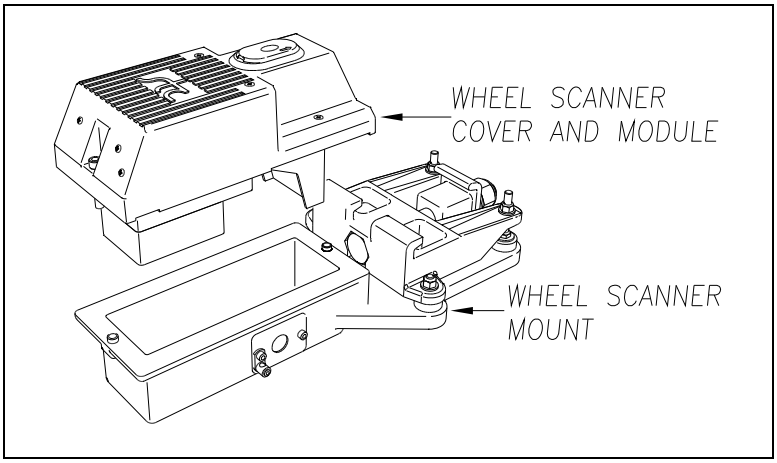

To replace a Type II wheel scanner cover-and-module assembly:

1. Be sure that you have on hand a new scanner cover-and-module assembly.
2. Be sure that you have on hand a T-handle 1/4-inch hex-wrench.
3. Turn off all power to the SmartScanNG² enclosure.
4. Using a T-handle 1/4-inch hex-wrench, loosen the two socket-head-cap screws on the cover of the bearing scanner.
5. Separate the scanner cover-and-module assembly from its mount.
6. Disconnect the scanner cable connector from the scanner box connector.

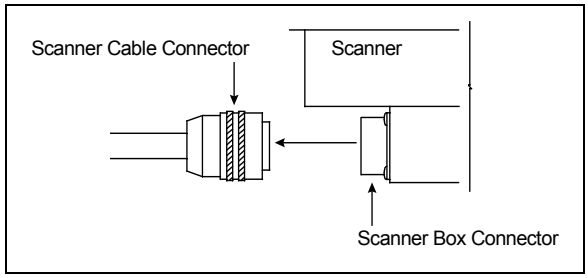

7. Store the removed scanner cover-and-module assembly in a safe place until you return it to STC for repair.
8. Attach the scanner cable connector to the scanner box connector (on the new scanner cover-and-module assembly).
9. With the hole (on top of the scanner cover) facing the center of the track, replace the scanner cover-and-module assembly onto its mount.
10. Using a T-handle 1/4-inch hex-wrench, tighten the two screws (on the scanner cover) until they are completely tight.
11. Turn on power to the SmartScanNG² enclosure.

Appendix D
Replacement of Type III Scanners

There are Type III bearing scanners and Type III wheel scanners. Both contain two major parts. The top part is the cover-and-module assembly. The module and its protective cover are tightly integrated and rarely should be taken apart. Except for the change of **filter frames** in the wheel scanner module, both types of cover-and-module assemblies are identical and can be used interchangeably. The bottom part is the mount. Bearing scanner mounts and wheel scanner mounts are different in design. They can't be interchanged.

This appendix tells how to replace scanner cover-and-module assemblies. Replacement of scanner mounts isn't covered in this guide.

D.1 Bearing Scanners

The figure below shows the major parts of a bearing scanner.

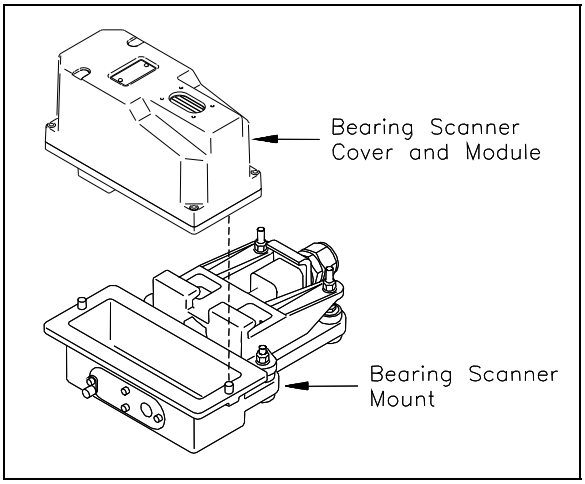

To replace a bearing scanner cover-and-module assembly:

1. Be sure that you have on hand a new scanner cover-and-module assembly.
2. Be sure that you have on hand a T-handle 1/4-inch hex-wrench.
3. Turn off all power to the SmartScanNG² enclosure.
4. Using a T-handle 1/4-inch hex-wrench, loosen the six socket-head-cap screws on the cover of the bearing scanner.

   Four screws attach the weather cover to the mounting plate and two screws attach the mounting plate to the mount.

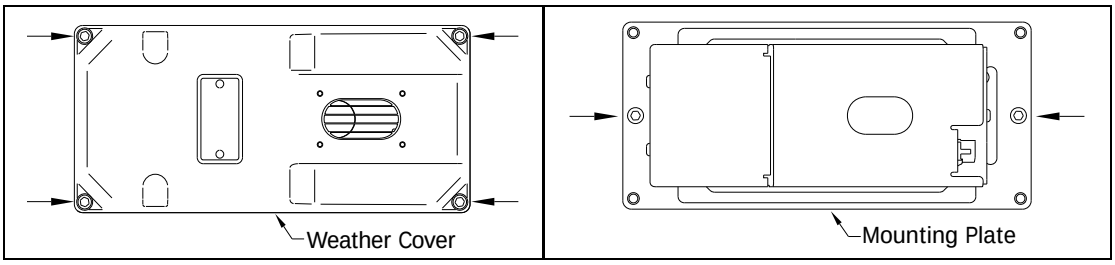

5 Separate the bearing scanner cover-and-module assembly from its mount.

6 Disconnect the heater wiring plug.

7 Disconnect the scanner cable connector from the scanner box connector.

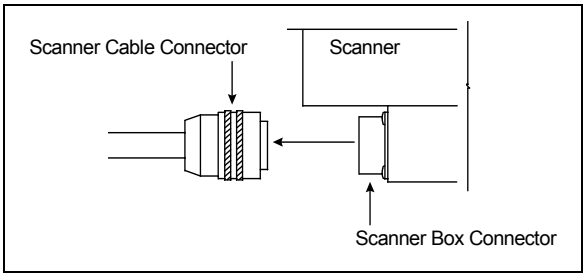

8 Store the removed scanner cover-and-module assembly in a safe place until you return it to STC for repair.

9 Attach the scanner cable connector to the scanner box connector of the new scanner cover-and-module assembly.

10 With the hole on top of the bearing scanner cover facing north or east, set the mounting plate back onto its scanner mount.

11 Using the T-handle 1/4-inch hex-wrench, uniformly tighten the two socket-head-cap screws.

12 Reconnect the heater wiring plug.

13 With the hole on top of the bearing scanner cover facing north or east, set the weather cover back onto its mounting plate.

14 Using the T-handle 1/4-inch hex-wrench, uniformly tighten the four socket-head-cap screws.

The top view of the bearing scanner mounting plate and weather cover is shown below.

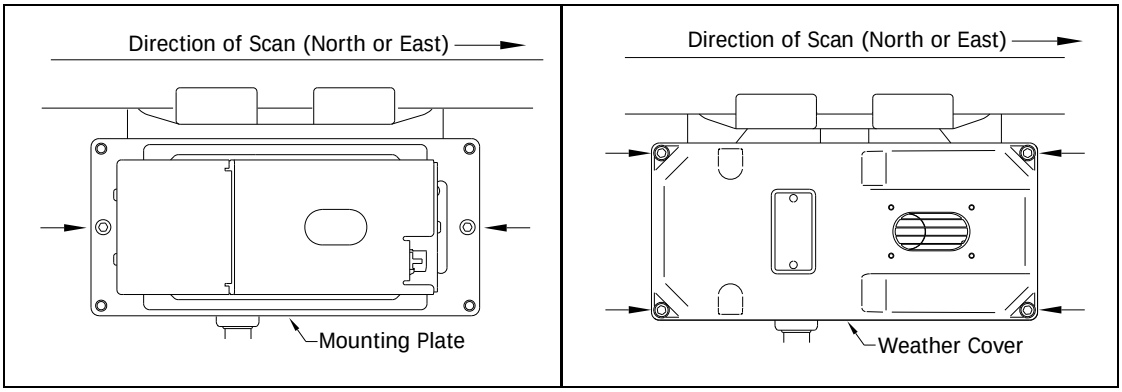

15 Turn on power to the scanners.

An assembled bearing scanner looks like this.

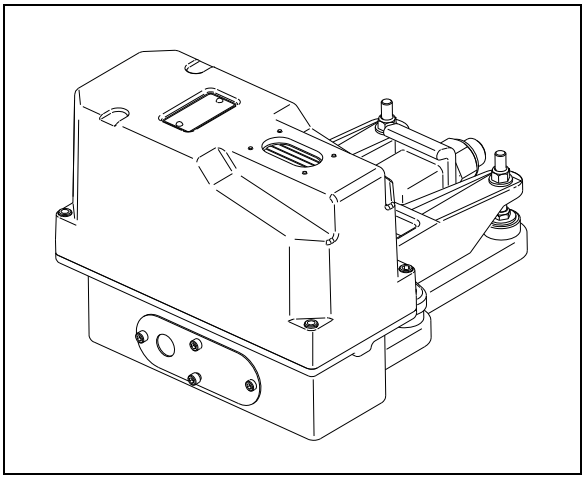

D.2 Wheel Scanners

The figure below shows the major parts of a wheel scanner.

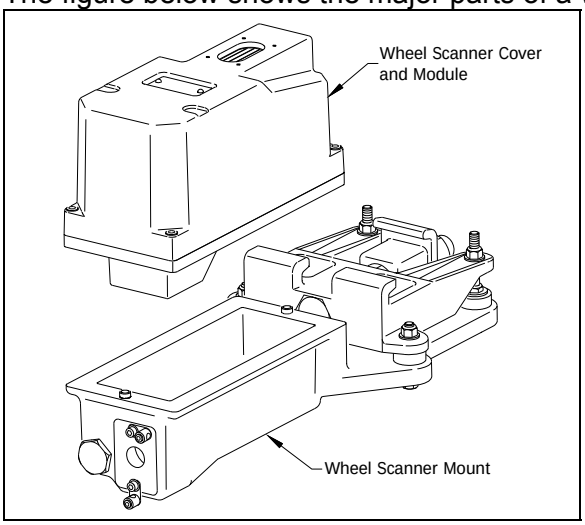

To replace a wheel scanner cover-and-module assembly:

1. Be sure that you have on hand a new scanner cover-and-module assembly.
2. Be sure that you have on hand a T-handle 1/4-inch hex-wrench.
3. Turn off all power to the scanners.

   This requires turning off the DC power switch on the SmartScanNG² enclosure and unplugging the AC power cord on the bottom of the SmartScanNG² enclosure.
4. Using a T-handle 1/4-inch hex-wrench, loosen the six socket-head-cap screws on the cover of the wheel scanner.

   Four screws attach the weather cover to the mounting plate and two screws attach the mounting plate to the mount.

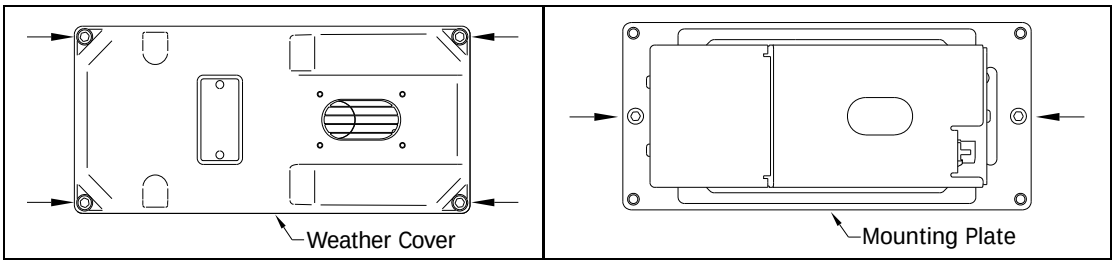

5. Separate the wheel scanner cover-and-module assembly from its mount.
6. Disconnect the heater wiring plug.
7. Disconnect the scanner cable connector from the scanner box connector.

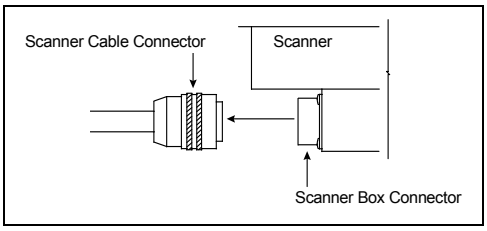

8 Store the removed scanner cover-and-module assembly in a safe place until you return it to STC for repair.

9 Attach the scanner cable connector to the scanner box connector of the new scanner cover-and-module assembly.

10 With the hole on top of the wheel scanner cover facing the center of the track, set the mounting plate back onto its scanner mount.

11 Using the T-handle 1/4-inch hex-wrench, uniformly tighten the two socket-head-cap screws.

12 Reconnect the heater wiring plug.

13 With the hole on top of the wheel scanner cover facing the center of the track, set the weather cover back onto its mounting plate.

14 Using the T-handle 1/4-inch hex-wrench, uniformly tighten the four socket-head-cap screws.

15 Turn on power to the SmartScanNG² enclosure.

Appendix E
Calibration of Type II Scanners

The SmartScanNG² system self-calibrates its pyrometer interface circuitry. You need only put a preheated calibrated heat source on a scanner and place the system in autocalibration mode. The system then scans all pyrometer inputs until the signal from the calibrated heat source is located. The necessary adjustments to the related interface circuitry are automatically made while the system monitors its own progress by analyzing changes in the heat signals. Once the procedure has been completed, autocalibration mode is disengaged and the calibration results are displayed on your computer.

This appendix tells how to use the calibrated heat source to calibrate the scanners.

E.1 Type II Bearing Scanners

STC recommends that you use the calibrated heat source (2100-810NG) only when the outside (ambient) temperature is above -18°C (0°F) and below 32°C (90°F). If you must use it at other times, do so only when the needle is centered on the front of the temperature meter. If the needle isn't stabilized within ± 2 degrees of set point, the heat source isn't operating properly.

To calibrate a bearing scanner:

1. Be sure that you have on hand a STC calibrated heat source (2100-810NG) and a laptop computer.
2. On the control panel of the calibrated heat source, toggle the **Gating** switch off.
3. Plug the proper end of the supplied 50-foot (15-meter) power cord into the **six**-contact circular connector on the front of the calibrated heat source.

   Sixty Hz is critical for proper operation. For a site that doesn't have a 120-volt 60-Hz power source, the heat source should be powered from a true sine wave inverter capable of 250 watts with an output of at least 110 volts at 60 Hz. The inverter should operate from an input voltage of 10.5 VDC to 15 VDC. A 120-volt USA socket should be provided to match the heat source power cord. The inverter should be grounded according to the manufacturer's recommendations.

   WARNING
   Once plugged in, both function connectors will have live AC present.

4. Using the supplied dust cap, cover the function connector that isn't being used.
5. Plug the other end of the power cord into the 120-volt USA socket.
6. On the control panel of the calibrated heat source, turn the temperature knob to **180°**.

7 Put the heat source in a shady area, out of direct sunlight and out of the wind.

8 Wait about 8 minutes for the heat source to reach operating temperature and stabilize.

The heat source has reached operating temperature and stabilized when the temperature meter needle remains centered.

Once the temperature stabilizes, calibration may begin. Once stabilized, the temperature will change less than plus-or-minus one-degree Fahrenheit.

9 Orient the power cord as depicted and place the calibrated heat source on the bearing scanner.

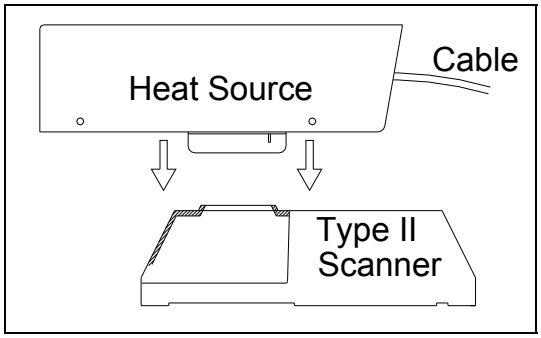

10 To prepare your computer:

- **a** Plug your computer into COM1 using a crossover (null-modem) cable.
- **b** Turn on your computer.
- **c** Be sure that your computer has installed communications software, that it is set to use full duplex, and that the baud rate is set to the appropriate setting (factory default is 19,200).

11 Using the serial interface, display the Main menu. Select **Systems Functions Menu**.

The Main menu looks like this.

```
SmartSCAN NG2, MP/KP:1234.5, Track:Single
07/24/2017 15:26:54, 28.1V, 85°F
Main Menu - Comm
----------------------------------------
                  .
                  .
                  .
[L] - System Functions Menu
[M] - Replay train
[N] - Security Menu
[X] - Exit
```

Select **Auto-calibration** to calibrate the system's pyrometer interface circuitry.

The SmartScanNG² system will now calibrate itself. **Follow along on your computer screen until you see "Auto-Calibration Disengaged."** This message is an indication that the system is done with the calibration procedure. To abort the process, press **[Esc]** on your computer <u>or</u> remove the heat source from the bearing scanner.

```
                    .
                    .
                    .
[E] - 1KHz Test Tone
[F] - Auto-Calibration
[G] - Reboot System
[H] - Delete All Stored Train Data
[I] - Clear Event Log
[J] - Update Menu
[K] - Maintenance Menu
[L] - Volume up (3)
[M] - Volume down (3)
[N] - Resistor Data
[O] - Radio Programming Menu
[P] - Scanner test
[X] - Exit
```

On your computer screen, an acceptable calibration looks like this. Your values will be different.

```
Auto Calibration Selected
Scanner Types
-----------------------------------------------------------------------
Rail-1..................... Type-II   Rail-2.................... Type-III
Wheel-1.................... Type-III  Wheel-2................... Type-II

Is this correct ?

Signal levels in millivolts with closed shutters
    Rail1            Rail2            Wheel1           Wheel2
Min/Max/Average  Min/Max/Average  Min/Max/Average  Min/Max/Average
 0   80    20     0   60    20     0   60    20     20  80    40

Opening the shutters.
Scanning for heat source. Press the 'Esc' key to abort.
Located 187F heat source at Rail1. Auto-calibration beginning in 0 secs.

.......Auto-Calibration Engaged.......

Testing Digital-Pot U-306. Stand by.
Digital-pot checks OK.
Previous calibrated digital-pot. setting was 38.
Adjusting digital-pot.
Temp = 225F  Pot = 59  Sec =   1   Pot. decremented by 1 step.
Temp = 224F  Pot = 58  Sec =   1   Pot. decremented by 1 step.
Temp = 221F  Pot = 57  Sec =   2   Pot. decremented by 1 step.
Temp = 219F  Pot = 56  Sec =   3   Pot. decremented by 1 step.
            .
            .
Temp = 183F  Pot = 35  Sec =  15   Pot. decremented by 1 step.
Temp = 182F  Pot = 34  Sec =  18   Pot. decremented by 1 step.
Temp = 181F  Pot = 33  Sec =  29   Pot. decremented by 1 step.
Temp = 179F  Pot = 33  Sec =  93   Monitoring heat source temperature.
Rail1 digital-pot setting of 33 was stored in EEPROM.
East Rail Scanner Calibration complete.
The setpoint is 180F. The calibrated temp. is 179F.
Closing the shutters.
Resistor test pending.

.......Auto-Calibration Disengaged.......
```

Before the shutters are opened, if you get a signal level greater than 200 millivolts, it usually means that there is noise on the scanner inputs, which most times is caused by an electrical problem with the scanner. If you cannot isolate and fix the cause of this problem, call STC for help.

```
Auto Calibration Selected

Signal levels in millivolts with closed shutters
    Rail1            Rail2            Wheel1           Wheel2
Min/Max/Average  Min/Max/Average  Min/Max/Average  Min/Max/Average
210 250    210     0   60    20     0   60    20     20  80    40
            .
            .
            .
```

Before the shutters are closed, if you don't get a calibrated temperature in the range 178°F to 182°F, it means that the scanner wasn't calibrated. If cleaning the optics doesn't solve your problem, replace the scanner cover-and-module assembly. If this doesn't solve your problem, call STC for help in fixing the problem.

12 When "Auto-Calibration Disengaged" is displayed on your computer, remove the calibrated heat source.

13 To return to the Main menu, type **X**

14 To exit the serial interface and return the system to normal operation, type **X**

15 Store the calibrated heat source and its power cord in the wayside enclosure.

NOTE:

Upon completion of autocalibration, the system acquires the scanner resistor temperature baseline values. The process begins with a 20 minute wait period in which the resistors are allowed to cool down. The system counts down during this period, sounding a tone each minute. After the 20 minute cool down period, the system opens and closes the shutters for a period of 8 minutes.

Covering the apertures of all four scanners during the baseline acquisition routine should result in a more accurate baseline measurement because the reference for the scanner is stable when covered. See **Appendix J** for a detailed explanation and instructions.

E.2 Type II Wheel Scanners

STC recommends that you use the calibrated heat source (2100-810NG) only when the outside (ambient) temperature is above -18°C (0°F) and below 32°C (90°F). If you must use it at other times, do so only when the needle is centered on the front of the temperature meter. If the needle isn't stabilized within ± 2 degrees of set point, the heat source isn't operating properly.

To calibrate a wheel scanner:

1. Be sure that you have on hand a STC calibrated heat source (2100-810NG) and a laptop computer.
2. On the control panel of the calibrated heat source, toggle the **Gating** switch off.
3. Plug the proper end of the supplied 50-foot (15-meter) power cord into the **six**-contact circular connector on the front of the calibrated heat source.

   Sixty Hz is critical for proper operation. For a site that doesn't have a 120-volt 60-Hz power source, the heat source should be powered from a true sine wave inverter capable of 250 watts with an output of at least 110 volts at 60 Hz. The inverter should operate from an input voltage of 10.5 VDC to 15 VDC. A 120-volt USA socket should be provided to match the heat source power cord. The inverter should be grounded according to the manufacturer's recommendations.

   WARNING

   Once plugged in, both function connectors will have live AC present.

4. Using the supplied dust cap, cover the function connector that isn't being used.
5. Plug the other end of the power cord into the 120-volt USA socket.
6. On the control panel of the calibrated heat source, turn the temperature knob to **180°**.
7. Put the heat source in a shady area, out of direct sunlight and out of the wind.
8. Wait about 8 minutes for the heat source to reach operating temperature and stabilize.

   The heat source has reached operating temperature and stabilized when the temperature meter needle remains centered.

   Once the temperature stabilizes, calibration may begin. Once stabilized, the temperature will change less than plus-or-minus one degree Fahrenheit.

   You'll need to remove the weather cover before you can replace the filter frame. Four socket-head-cap screws attach the weather cover to the mounting plate. Before continuing, be sure that the black filter frame is securely in place and that the four socket-head-cap screws on the weather cover are completely tight.

9 Remove the attenuation plug from the wheel scanner.

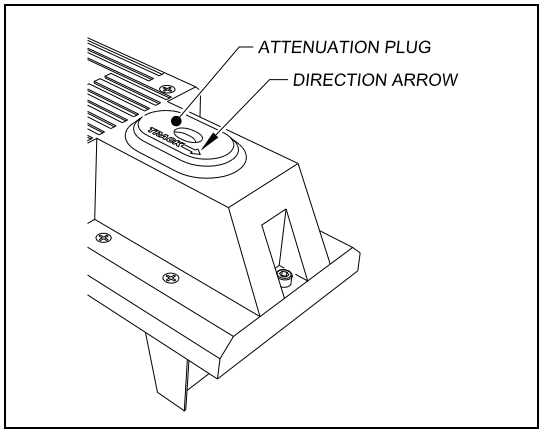

10 Orient the power cord as depicted and place the calibrated heat source on the wheel scanner.

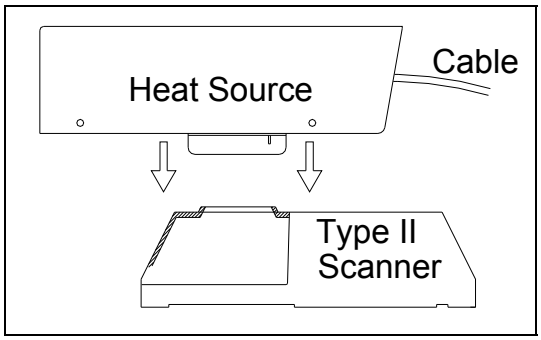

11 To prepare your computer:

- **a** Plug your computer into COM1 using a crossover (null-modem) cable.
- **b** Turn on your computer.
- **c** Be sure that your computer has installed communications software, that it is set to use full duplex, <u>and</u> that the baud rate is set to the appropriate setting (factory default is 19,200).

12 Using the serial interface, display the Main menu.

The Main menu looks like this.

```
SmartSCAN NG2, MP/KP:1234.5, Track:Single
07/24/2017 15:30:45, 28.1V, 86˚F
Main Menu - Comm
----------------------------------------
                 .
                 .
                 .
[K] - Event log
[L] - System Functions Menu
[M] - Replay train
[N] - Security Menu
[X] - Exit
```

13 Select the **Auto-Calibration option** to calibrate the system's pyrometer interface circuitry.

The SmartScanNG² system will now calibrate itself. **Follow along on your computer screen until you see "Auto-Calibration Disengaged."** This message is an indication that the system is done with the calibration procedure. To abort the process, press **[Esc]** on your computer <u>or</u> remove the heat source from the wheel scanner.

Before the shutters are opened, if you get a signal level <u>greater</u> <u>than</u> 200 millivolts, it usually means that there is noise on the scanner inputs, which most times is caused by an electrical problem with the scanner. If you cannot isolate and fix the cause of this problem, call STC for help.

```
                 .
                 .
                 .
[E] - 1KHz Test Tone
[F] - Auto-Calibration
[G] - Reboot System
[H] - Delete All Stored Train Data
[I] - Clear Event Log
[J] - Update Menu
[K] - Maintenance Menu
[L] - Volume up (3)
[M] - Volume down (3)
[N] - Resistor Data
[O] - Radio Programming Menu
[P] - Scanner test
[X] – Exit
```

Before the shutters are closed, if you don't get a calibrated temperature in the range 178°F to 182°F, it means that the scanner wasn't calibrated. If cleaning the optics doesn't solve your problem, replace the scanner cover-and-module assembly. If this doesn't solve your problem, call STC for help in fixing the problem.

14 When "Auto-Calibration Disengaged" is displayed on your computer, remove the calibrated heat source.

15 Replace the attenuation plug.

The attenuation plug has a direction arrow molded into the top of the plug. This arrow should be pointing toward the rail.

16 To return to the Main menu, type **X**.

17 To exit the serial interface and return the system to normal operation, type **X**.

18 Store the calibrated heat source and its power cord in the wayside enclosure.

NOTE:

Upon completion of autocalibration, the system acquires the scanner resistor temperature baseline values. The process begins with a 20 minute wait period in which the resistors are allowed to cool down. The system counts down during this period, sounding a tone each minute. After the 20 minute cool down period, the system opens and closes the shutters for a period of 8 minutes.

Covering the apertures of all four scanners during the baseline acquisition routine should result in a more accurate baseline measurement because the reference for the scanner is stable when covered. See **Appendix J** for a detailed explanation and instructions.

E.3 Heat Source: Power Cable Warning

Warning - Caution

<u>PLEASE</u> – ONLY USE THE POWER CORD THAT WAS SHIPPED WITH THIS HEAT SOURCE.

USE OF THE OLD CORD WITH PINS IN THE CONNECTOR WILL DAMAGE THIS HEAT SOURCE

The old style power cord is a shock hazard because the connector is not “finger safe”. As a result, the connectors on both the power cord and the heat source were changed.

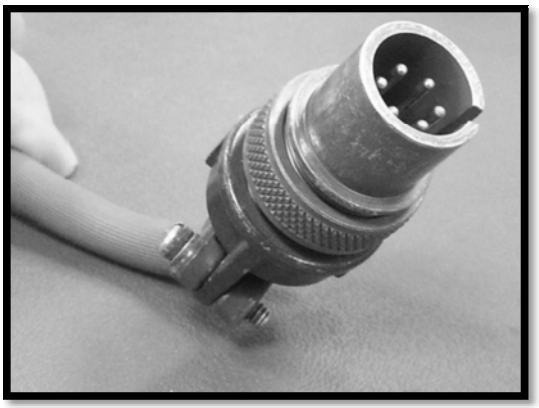

Old style plug with pins.

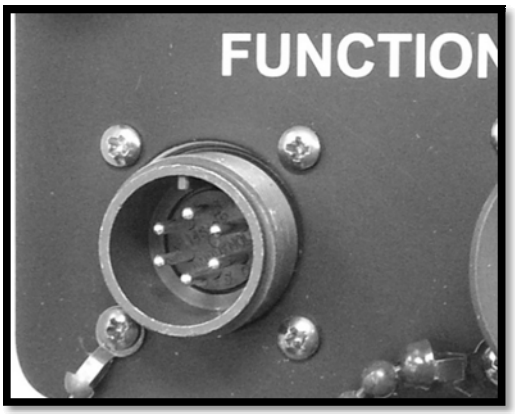

New heat source with pins.

If an old style cable is forcibly connected to a new heat source, the reverse polarity of the mating connector pins will damage the heat source.

Appendix F
Calibration of Type III Scanners

The SmartScanNG² system self-calibrates its pyrometer interface circuitry. You need only put a preheated calibrated heat source on a scanner and place the system in autocalibration mode. The system then scans all pyrometer inputs until the signal from the calibrated heat source is located. The necessary adjustments to the related interface circuitry are automatically made while the system monitors its own progress by analyzing changes in the heat signals. Once the procedure has been completed, autocalibration mode is disengaged and the calibration results are displayed on your computer.

This appendix tells how to use the calibrated heat source to calibrate the scanners.

F.1 Bearing Scanners

STC recommends that you use the calibrated heat source (2100-810NG) only when the outside (ambient) temperature is above -18°C (0°F) and below 32°C (90°F). If you must use it at other times, do so only when the needle is centered on the front of the temperature meter. If the needle isn't stabilized within ± 2 degrees of set point, the heat source isn't operating properly.

To calibrate a bearing scanner:

1. Be sure that you have on hand a STC calibrated heat source (2100-810NG) and a laptop computer.
2. On the control panel of the calibrated heat source, toggle the **Gating** switch off.
3. Plug the proper end of the supplied 50-foot (15-meter) power cord into the **six**-contact circular connector on the front of the calibrated heat source.

   Sixty Hz is critical for proper operation. For a site that doesn't have a 120-volt 60-Hz power source, the heat source should be powered from a true sine wave inverter capable of 250 watts with an output of at least 110 volts at 60 Hz. The inverter should operate from an input voltage of 10.5 VDC to 15 VDC. A 120-volt USA socket should be provided to match the heat source power cord. The inverter should be grounded according to the manufacturer's recommendations.

   WARNING
   Once plugged in, both function connectors will have live AC present.

4. Using the supplied dust cap, cover the function connector that isn't being used.
5. Plug the other end of the power cord into the 120-volt USA socket.
6. On the control panel of the calibrated heat source, turn the temperature knob to **180°**.

7 Put the heat source in a shady area, out of direct sunlight and out of the wind.

8 Wait about 8 minutes for the heat source to reach operating temperature and stabilize.

The heat source has reached operating temperature and stabilized when the temperature meter needle remains centered.

Once the temperature stabilizes, calibration may begin. Once stabilized, the temperature will change less than plus-or-minus one-degree Fahrenheit.

9 With the power cord to the front of the scanner, place the calibrated heat source on the bearing scanner.

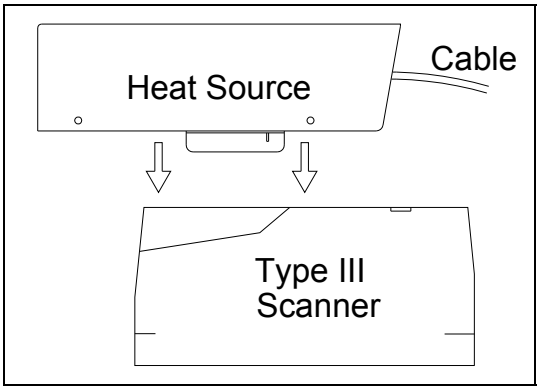

10 To prepare your computer:

- **a** Plug your computer into COM1 using a crossover (null-modem) cable.
- **b** Turn on your computer.
- **c** Be sure that your computer has installed communications software, that it is set to use full duplex, and that the baud rate is set to the appropriate setting (factory default is 19,200).

11 Using the serial interface, display the Main menu.

The Main menu looks like this.

```
SmartSCAN NG2, MP/KP:1234.5, Track:Single
07/24/2017 15:26:54, 28.1V, 85°F
Main Menu - Comm
----------------------------------------
                  .
                  .
                  .
[L] - System Functions Menu
[M] - Replay train
[N] - Security Menu
[X] - Exit
```

12 Select **Auto-calibration** to calibrate the system's pyrometer interface circuitry.

The SmartScanNG² system will now calibrate itself. **Follow along on your computer screen until you see "Auto-Calibration Disengaged."** This message is an indication that the system is done with the calibration procedure. To abort the process, press **[Esc]** on your computer <u>or</u> remove the heat source from the bearing scanner.

```
                    .
                    .
                    .
[E] - 1KHz Test Tone
[F] - Auto-Calibration
[G] - Reboot System
[H] - Delete All Stored Train Data
[I] - Clear Event Log
[J] - Update Menu
[K] - Maintenance Menu
[L] - Volume up (3)
[M] - Volume down (3)
[N] - Resistor Data
[O] - Radio Programming Menu
[P] - Scanner test
[X] – Exit
```

On your computer screen, an acceptable calibration looks like this. Your values will be different.

```
Auto Calibration Selected
Scanner Types
-----------------------------------------------------------------------
Rail-1..................... Type-II   Rail-2.................... Type-III
Wheel-1.................... Type-III  Wheel-2................... Type-II

Is this correct ?

Signal levels in millivolts with closed shutters
    Rail1            Rail2            Wheel1           Wheel2
Min/Max/Average  Min/Max/Average  Min/Max/Average  Min/Max/Average
 0   80    20     0   60    20     0   60    20     20  80    40

Opening the shutters.
Scanning for heat source. Press the 'Esc' key to abort.
Located 187F heat source at Rail1. Auto-calibration beginning in 0 secs.

.......Auto-Calibration Engaged.......

Testing Digital-Pot U-306. Stand by.
Digital-pot checks OK.
Previous calibrated digital-pot. setting was 38.
Adjusting digital-pot.
Temp = 225F  Pot = 59  Sec =   1   Pot. decremented by 1 step.
Temp = 224F  Pot = 58  Sec =   1   Pot. decremented by 1 step.
Temp = 221F  Pot = 57  Sec =   2   Pot. decremented by 1 step.
Temp = 219F  Pot = 56  Sec =   3   Pot. decremented by 1 step.
            .
            .
Temp = 183F  Pot = 35  Sec =  15   Pot. decremented by 1 step.
Temp = 182F  Pot = 34  Sec =  18   Pot. decremented by 1 step.
Temp = 181F  Pot = 33  Sec =  29   Pot. decremented by 1 step.
Temp = 179F  Pot = 33  Sec =  93   Monitoring heat source temperature.
Rail1 digital-pot setting of 33 was stored in EEPROM.
East Rail Scanner Calibration complete.
The setpoint is 180F. The calibrated temp. is 179F.
Closing the shutters.
Resistor test pending.

.......Auto-Calibration Disengaged.......
```

Before the shutters are opened, if you get a signal level greater than 200 millivolts, it usually means that there is noise on the scanner inputs, which most times is caused by an electrical problem with the scanner. If you cannot isolate and fix the cause of this problem, call STC for help.

```
Auto Calibration Selected

Signal levels in millivolts with closed shutters
    Rail1            Rail2            Wheel1           Wheel2
Min/Max/Average  Min/Max/Average  Min/Max/Average  Min/Max/Average
210 250    210     0   60    20     0   60    20     20  80    40
            .
            .
            .
```

Before the shutters are closed, if you don't get a calibrated temperature in the range 178°F to 182°F, it means that the scanner wasn't calibrated. If cleaning the optics doesn't solve your problem, replace the scanner cover-and-module assembly. If this doesn't solve your problem, call STC for help in fixing the problem.

13 When "Auto-Calibration Disengaged" is displayed on your computer, remove the calibrated heat source.

14 To return to the Main menu, type **X**

15 To exit the serial interface and return the system to normal operation, type **X**

16 Store the calibrated heat source and its power cord in the wayside enclosure.

NOTE:

Upon completion of autocalibration, the system acquires the scanner resistor temperature baseline values. The process begins with a 20 minute wait period in which the resistors are allowed to cool down. The system counts down during this period, sounding a tone each minute. After the 20 minute cool down period, the system opens and closes the shutters for a period of 8 minutes.

Covering the apertures of all four scanners during the baseline acquisition routine should result in a more accurate baseline measurement because the reference for the scanner is stable when covered. See **Appendix J** for a detailed explanation and instructions.

F.2 Wheel Scanners

STC recommends that you use the calibrated heat source (2100-810NG) only when the outside (ambient) temperature is above -18°C (0°F) and below 32°C (90°F). If you must use it at other times, do so only when the needle is centered on the front of the temperature meter. If the needle isn't stabilized within ± 2 degrees of set point, the heat source isn't operating properly.

To calibrate a wheel scanner:

1. Be sure that you have on hand a STC calibrated heat source (2100-810NG) and a laptop computer.
2. On the control panel of the calibrated heat source, toggle the **Gating** switch off.
3. Plug the proper end of the supplied 50-foot (15-meter) power cord into the **six**-contact circular connector on the front of the calibrated heat source.

   Sixty Hz is critical for proper operation. For a site that doesn't have a 120-volt 60-Hz power source, the heat source should be powered from a true sine wave inverter capable of 250 watts with an output of at least 110 volts at 60 Hz. The inverter should operate from an input voltage of 10.5 VDC to 15 VDC. A 120-volt USA socket should be provided to match the heat source power cord. The inverter should be grounded according to the manufacturer's recommendations.

   WARNING

   Once plugged in, both function connectors will have live AC present.

4. Using the supplied dust cap, cover the function connector that isn't being used.
5. Plug the other end of the power cord into the 120-volt USA socket.
6. On the control panel of the calibrated heat source, turn the temperature knob to **180°**.
7. Put the heat source in a shady area, out of direct sunlight and out of the wind.
8. Wait about 8 minutes for the heat source to reach operating temperature and stabilize.

   The heat source has reached operating temperature and stabilized when the temperature meter needle remains centered.

   Once the temperature stabilizes, calibration may begin. Once stabilized, the temperature will change less than plus-or-minus one degree Fahrenheit.
9. Replace the red filter frame with the black one during calibration.

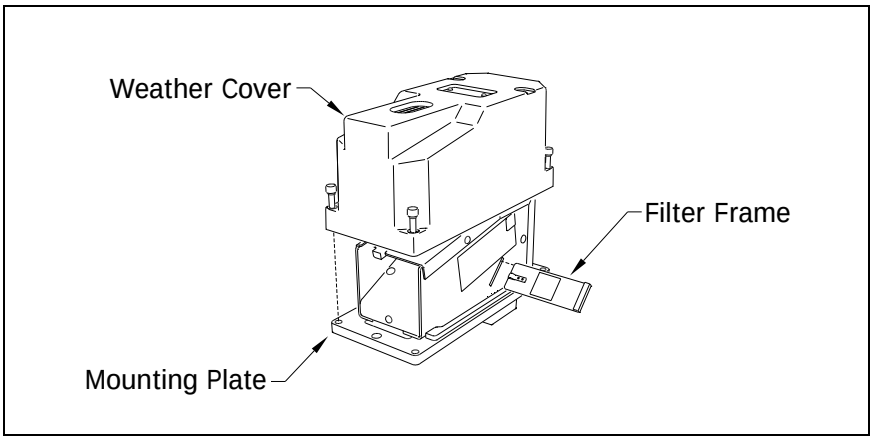

You'll need to remove the weather cover before you can replace the filter frame. Four socket-head-cap screws attach the weather cover to the mounting plate. Before continuing, be sure that the black filter frame is securely in place and that the four socket-head-cap screws on the weather cover are completely tight.

10 Re With the power cord to the front of the scanner, place the calibrated heat source on the wheel scanner

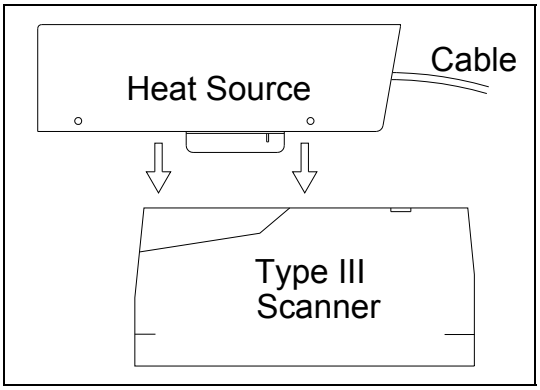

11 To prepare your computer:

a Plug your computer into COM1 using a crossover (null-modem) cable.

b Turn on your computer.

c Be sure that your computer has installed communications software, that it is set to use full duplex, and that the baud rate is set to the appropriate setting (factory default is 19,200).

12 Using the serial interface, display the Main menu.

The Main menu looks like this.

```
SmartSCAN NG2, MP/KP:1234.5, Track:Single
07/24/2017 15:30:45, 28.1V, 86˚F
Main Menu - Comm
----------------------------------------
                 .
                 .
                 .
[K] - Event log
[L] - System Functions Menu
[M] - Replay train
[N] - Security Menu
[X] - Exit
```

13 Select the **Auto-Calibration option** to calibrate the system's pyrometer interface circuitry.

The SmartScanNG² system will now calibrate itself. **Follow along on your computer screen until you see "Auto-Calibration Disengaged."** This message is an indication that the system is done with the calibration procedure. To abort the process, press **[Esc]** on your computer or remove the heat source from the wheel scanner.

Before the shutters are opened, if you get a signal level greater than 200 millivolts, it usually means that there is noise on the scanner inputs, which most times is caused by an electrical problem with the scanner. If you cannot isolate and fix the cause of this problem, call STC for help.

```
                 .
                 .
                 .
[E] - 1KHz Test Tone
[F] - Auto-Calibration
[G] - Reboot System
[H] - Delete All Stored Train Data
[I] - Clear Event Log
[J] - Update Menu
[K] - Maintenance Menu
[L] - Volume up (3)
[M] - Volume down (3)
[N] - Resistor Data
[O] - Radio Programming Menu
[P] - Scanner test
[X] – Exit
```

Before the shutters are closed, if you don't get a calibrated temperature in the range 178°F to 182°F, it means that the scanner wasn't calibrated. If cleaning the optics doesn't solve your problem, replace the scanner cover-and-module assembly. If this doesn't solve your problem, call STC for help in fixing the problem.

14 When "Auto-Calibration Disengaged" is displayed on your computer, remove the calibrated heat source.

15 To return to the Main menu, type **X**.

16 To exit the serial interface and return the system to normal operation, type **X**.

17 Replace the black filter frame with the red one immediately following the successful completion of the auto-calibration function.

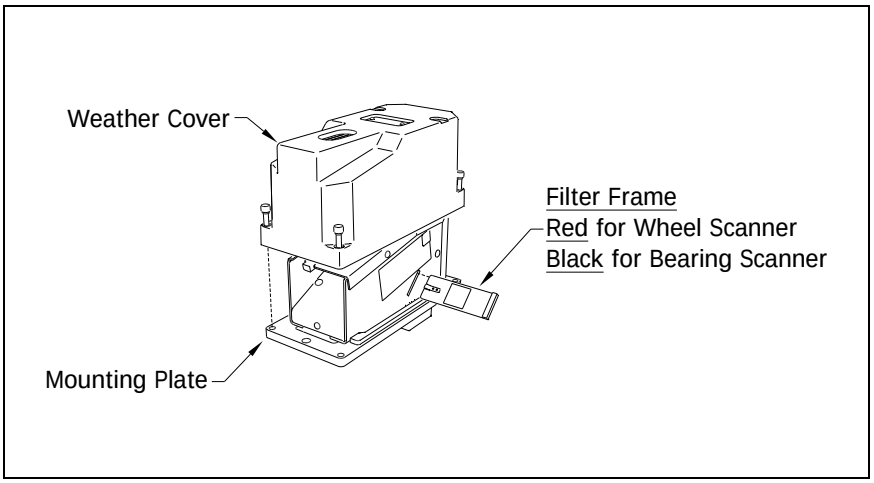

**** Before continuing, be sure that the red filter frame is securely in place and that the four socket-head-cap screws on the weather cover are completely tight. ****

18 Store the calibrated heat source and its power cord in the wayside enclosure.

NOTE:

Upon completion of autocalibration, the system acquires the scanner resistor temperature baseline values. The process begins with a 20 minute wait period in which the resistors are allowed to cool down. The system counts down during this period, sounding a tone each minute. After the 20 minute cool down period, the system opens and closes the shutters for a period of 8 minutes.

Covering the apertures of all four scanners during the baseline acquisition routine should result in a more accurate baseline measurement because the reference for the scanner is stable when covered. See **Appendix J** for a detailed explanation and instructions.

F.3 Heat Source: Power Cable Warning

Warning - Caution

<u>PLEASE</u> – ONLY USE THE POWER CORD THAT WAS SHIPPED WITH THIS HEAT SOURCE.

USE OF THE OLD CORD WITH PINS IN THE CONNECTOR WILL DAMAGE THIS HEAT SOURCE

The old style power cord is a shock hazard because the connector is not “finger safe”. As a result, the connectors on both the power cord and the heat source were changed.

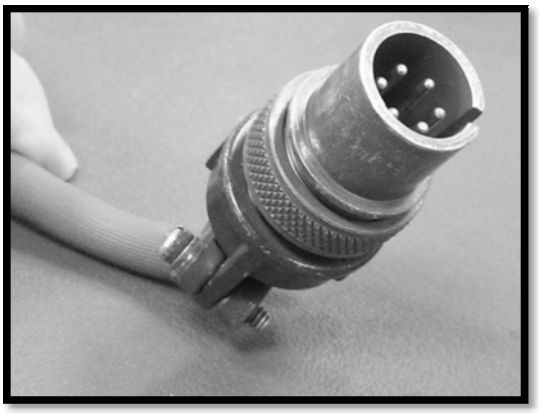

Old style plug with pins.

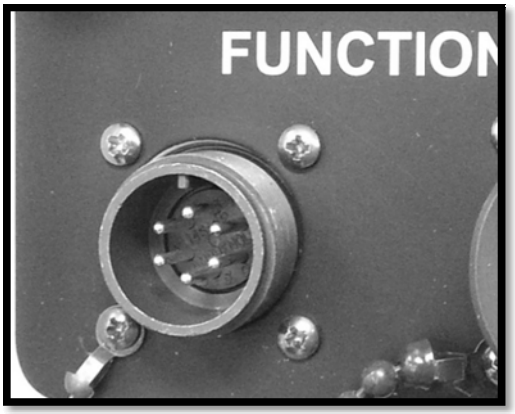

New heat source with pins.

If an old style cable is forcibly connected to a new heat source, the reverse polarity of the mating connector pins will damage the heat source.

Appendix G
Lens Cleaning of Scanners

This appendix tells how to clean the optics in the scanners.

G.1 Type III Scanners

To clean the optics in the scanners:

1 Be sure that you have on hand a T-handle 1/4-inch hex-wrench.

2 Using the T-handle 1/4-inch hex-wrench, loosen the four socket-head-cap screws that attach the weather cover to the mounting plate.

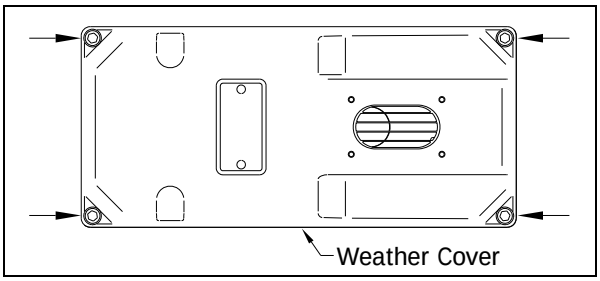

3 Remove the weather cover from its mounting plate.

Be careful not to damage the electrical connection for the cover heaters.

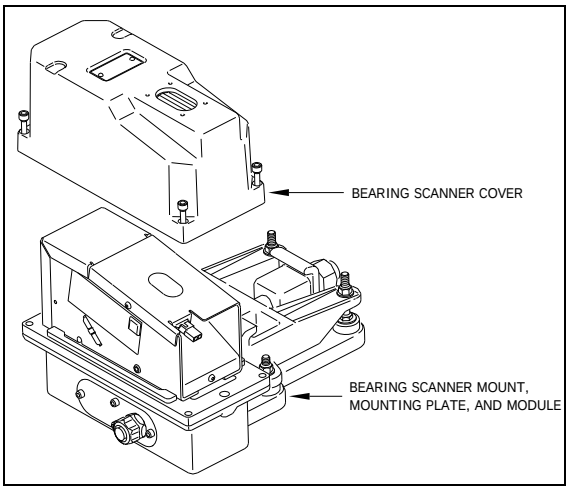

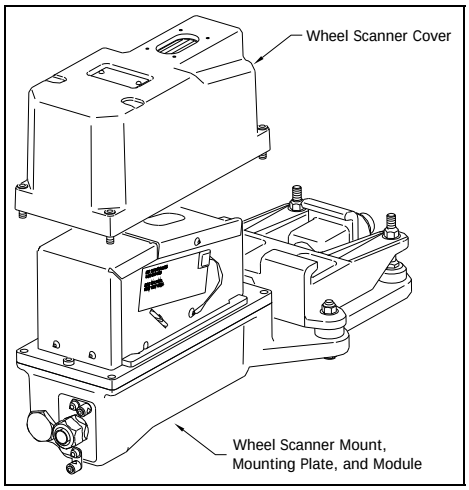

4 Disconnect the heater wiring plug.

On the side of the scanner module, you'll find a metal tab that protrudes about 1/4 inch outside the module.

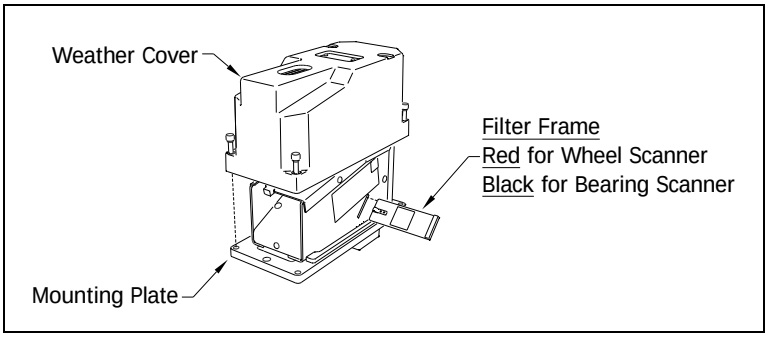

5 Grasp the tab and pull the filter frame out of the scanner module.

6 Using the brush supplied with the tool kit, lightly dust any excess material from the filter frame glass.

Be careful not to abrade or scratch the surface of the glass.

7 Apply a small amount of Vallen V8L cleaning solution (included in the tool kit) directly to the glass filter to loosen any remaining contamination.

8 Gently polish the reflective glass surface of the filter to remove any remaining contamination.

9 Open the shutter by stroking one of the gating transducers with a piece of ferrous metal.

10 If the lens surface appears to have any dust on it, insert the brush from the tool kit through the baffle plates until it contacts the lens surface and apply a twisting motion to dislodge any accumulated dust.

11 Remove the brush and visually inspect the lens for cleanliness.

12 Reinstall the filter frame assembly properly - (The reflective surface will be facing the view port opening of the scanner) Reconnect the heater wiring plug.

13 Re-connect the scanner cover heater.

14 If this is a **bearing scanner**:

With the hole on top of the bearing scanner cover facing north or east, set the weather cover back onto its mounting plate. Using the T-handle 1/4-inch hex-wrench, uniformly tighten the four socket-head-cap screws.

15 If this is a **wheel scanner**:

With the hole on top of the wheel scanner cover facing the center of the track, set the weather cover back onto its mounting plate. Using the T-handle 1/4-inch hex-wrench, uniformly tighten the four socket-head-cap screws.

G.2 Type II Scanners

To clean the optics in the **Type II** scanners:

1. Be sure that you have on hand a T-handle 1/4-inch hex-wrench and a 9/64-inch Allen wrench.
2. Using the T-handle 1/4-inch hex-wrench, loosen the two socket-head-cap screws that attach the weather cover to the mount.

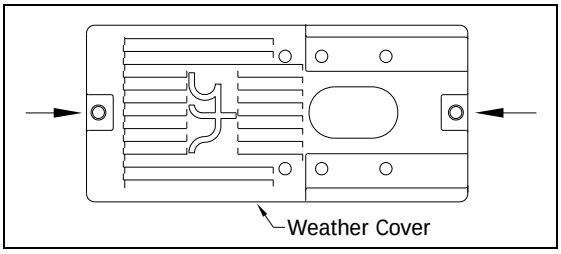

3. Separate the scanner cover-and-module assembly from its mount.

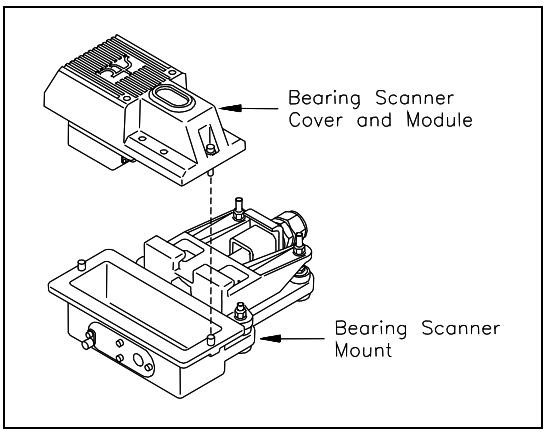

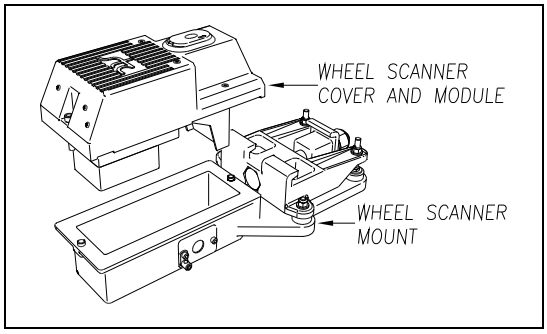

4. Disconnect the scanner cable connector from the scanner box connector.

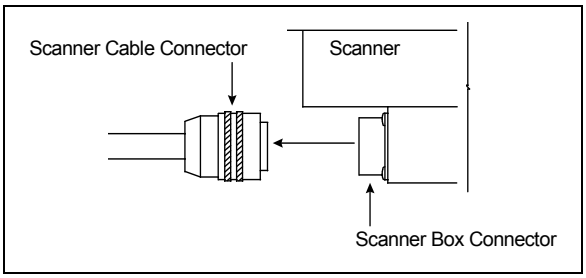

5. Turn the cover-and-module assembly upside down.
6. Using the 9/64-inch Allen wrench, remove the four socket-head-cap screws from the bottom panel.

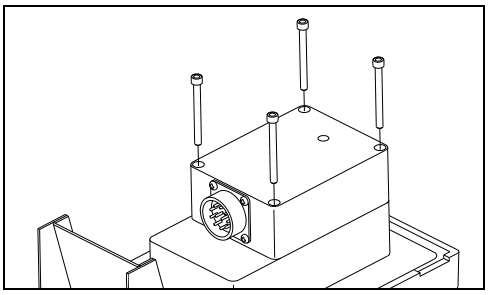

7 Store the socket-head-cap screws in a safe place until you replace it.

8 To expose the internal scanner module and lens assembly, separate the bottom panel of the scanner from the main body.

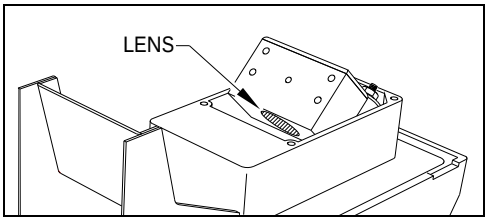

9 Using a soft dry cloth, remove any accumulated dirt or grit.

Be careful not to abrade or scratch the surface of the lens.

10 Using a soft clean cloth, apply a mild cleaning solution such a Vallen V8L or any similar solution that would typically be used for cleaning eyeglasses.

11 Gently wipe the entire surface of the lens surface.

12 To restore a uniform surface, gently polish the lens surface with a clean dry cloth.

13 Reposition the bottom panel.

14 Replace the four socket-head-cap screws and tighten by hand.

15 Using the 9/64-inch Allen wrench, tighten the four socket-head-cap screws until they are completely tight.

Be sure that the screws are uniformly tightened.

16 Attach the scanner cable connector to the scanner box connector.

17 If this is a bearing scanner:

- **a** With the hole on top of the bearing scanner cover facing north or east, set the cover-and-module assembly onto its mount.
- **b** Using the T-handle 1/4-inch hex-wrench, uniformly tighten the two socket-head-cap screws.

18 If this is a wheel scanner:

- **a** With the hole on top of the wheel scanner cover facing the center of the track, set the cover-and-module assembly onto its mount.
- **b** Using the T-handle 1/4-inch hex-wrench, uniformly tighten the two socket-head-cap screws.

Appendix H
Predictive Gate Scanning

This appendix describes predictive gate scanning of bearings.

H.1 Overview

If a pyrometer is exposed to extreme infrared energy emission, the device itself can be driven into a saturated state. When this happens, it is blinded to subsequent changes in infrared energy emission. This blinded state can last up to 1-1/2 seconds.

Under certain circumstances, a pyrometer may be driven into saturation before the opening of the gate for a given axle. If the open-gate period was the only time during which pyrometer readings were sampled and processed, the system might miss an overheated bearing due to a device that was blinded before the opening of the gate. This can happen when a bearing is so overheated that it gives off infrared energy that can be seen by the pyrometer long before the bearing enters the pyrometer's field of view.

To compensate for this, the SmartScanNG² system includes special logic for processing heat seen by the pyrometers as they scan between the axle gates. The interval between axles has been divided into two parts.

The first part of this interval is the 16 inches (40.6 centimeters) that immediately precede the axle as it approaches the bearing scanners. This interval is treated as a "predictive gate" region in which the actual gate period (the time a bearing is physically in the pyrometer's field of view) is extended by 16 inches. The remainder of the "between gate" interval forms the second part. Heat values read during this second interval are ignored.

The figure below depicts the three distinct scanning intervals (the in-gate period plus the two between-gate intervals).

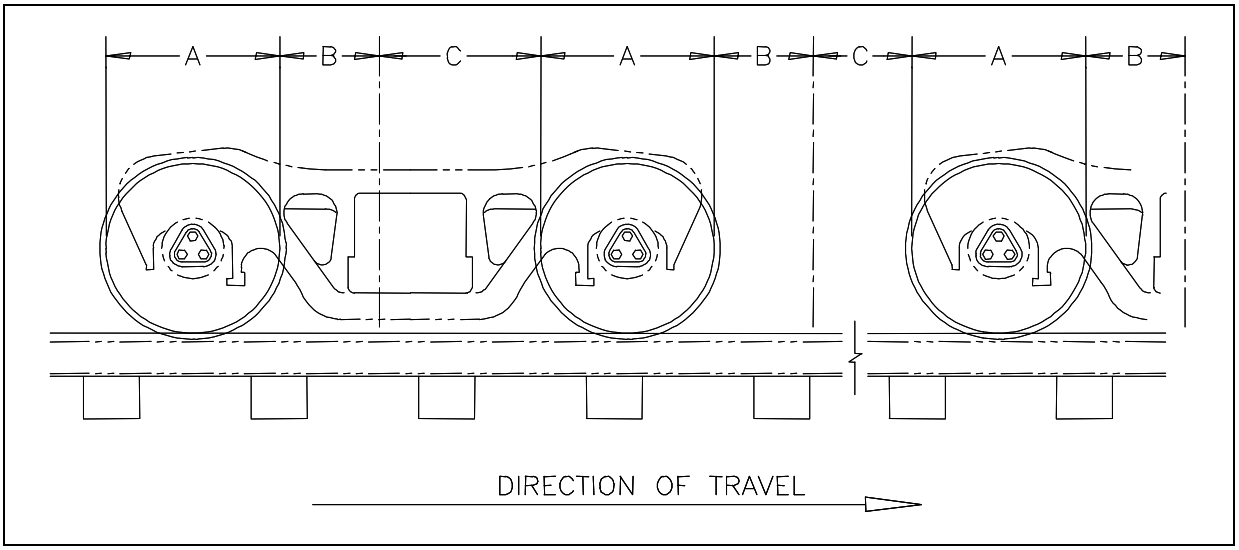

The table below defines the intervals.

Interval	Description
A	The normal bearing scanning interval of about 24 inches (61 centimeters), depending on the transducer spacing.
B	A distance of about 16 inches (40.6 centimeters) before a given wheel.
C	The distance between wheels that doesn't fall within interval-B.

H.2 Scanning Process

Interval-A is the normal bearing scanning interval. Interval-B is an extension of interval-A. The greatest value read in either of these two intervals is recorded as the temperature for the axle. This value is checked for alarm levels in the same manner that scanned bearing temperatures are normally handled.

For interval-A: Heat values read during interval-A are processed normally.

For interval-B: Heat values read during interval-B that do not meet or exceed the Absolute alarm threshold are ignored. Values that meet or exceed the Absolute alarm threshold are handled as follows:

> If the interval-A heat value meets or exceeds the Absolute alarm threshold, it is processed normally and the interval-B heat reading is ignored.
>
> If the interval-A heat value does not meet or exceed the Absolute alarm threshold, but interval-B heat value does, a Pyrometer Saturation alarm is flagged and the interval-B heat value is stored and reported for the alarmed axle.

For interval-C: Heat values read during interval-C are ignored.

H.3 Reporting the Pyrometer Saturation Alarm

If a Pyrometer Saturation alarm is detected and assigned to an axle, a printed message will appear on Detail reports.

The figure below shows part of a Train Detail report with a Pyrometer Saturation alarm. The contents of your report will be different.

```
                      Southern Technologies Corporation
                       Next Generation Detector System
                                 TRAIN DETAIL
==============================================================================

                                          .
                                          .
                                          .

            Rail       Wheel
Car Axle East  West  East  West   ON   OFF PW1 PW2  Alarms
  1    1   58    30    98   102   35     0  16  17
       2   58    30    98   102   35    82  13  13
       3  219    30    98   102   35    85  13  13   East Rail Pyro Saturation Alarm
       4   58    30    98   102   35   839  13  13
       5   58    30    98   102   35    85  13  13
       6   58    30    98   102   35    85  13  13

  2    7   58    30    98   102   35   238  13  13
       8   58    30    98   102   34    85  13  13

                                          .
                                          .
                                          .
```

Appendix I
2500-402 Spacer Kit Installation

The 2500-402 Spacer Kit provides hardware necessary to lower the Type III Hotwheel Scanner assembly by either ½” or 1” for those applications that require additional rail clearance.

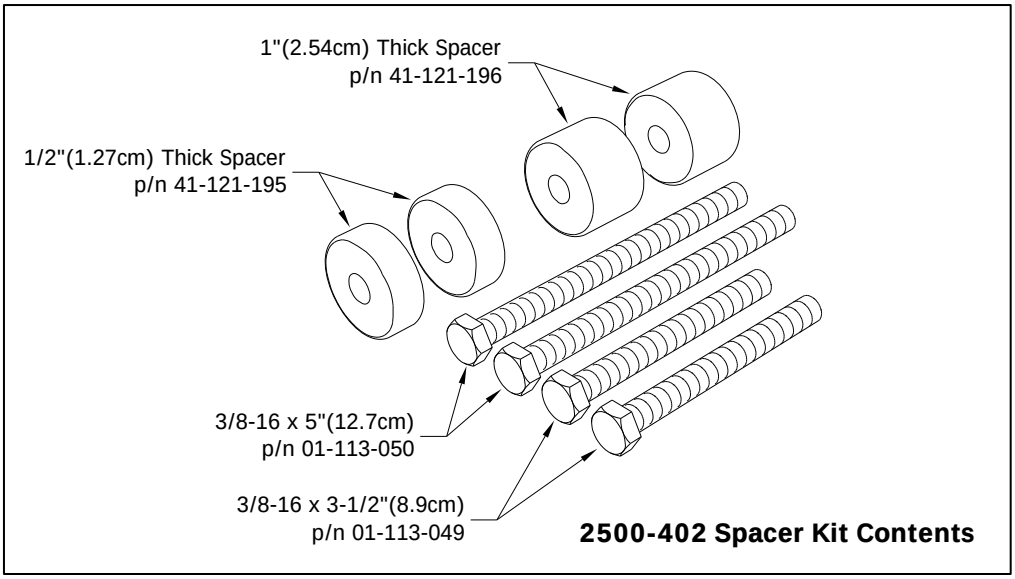

2500-402 Spacer Kit Contents

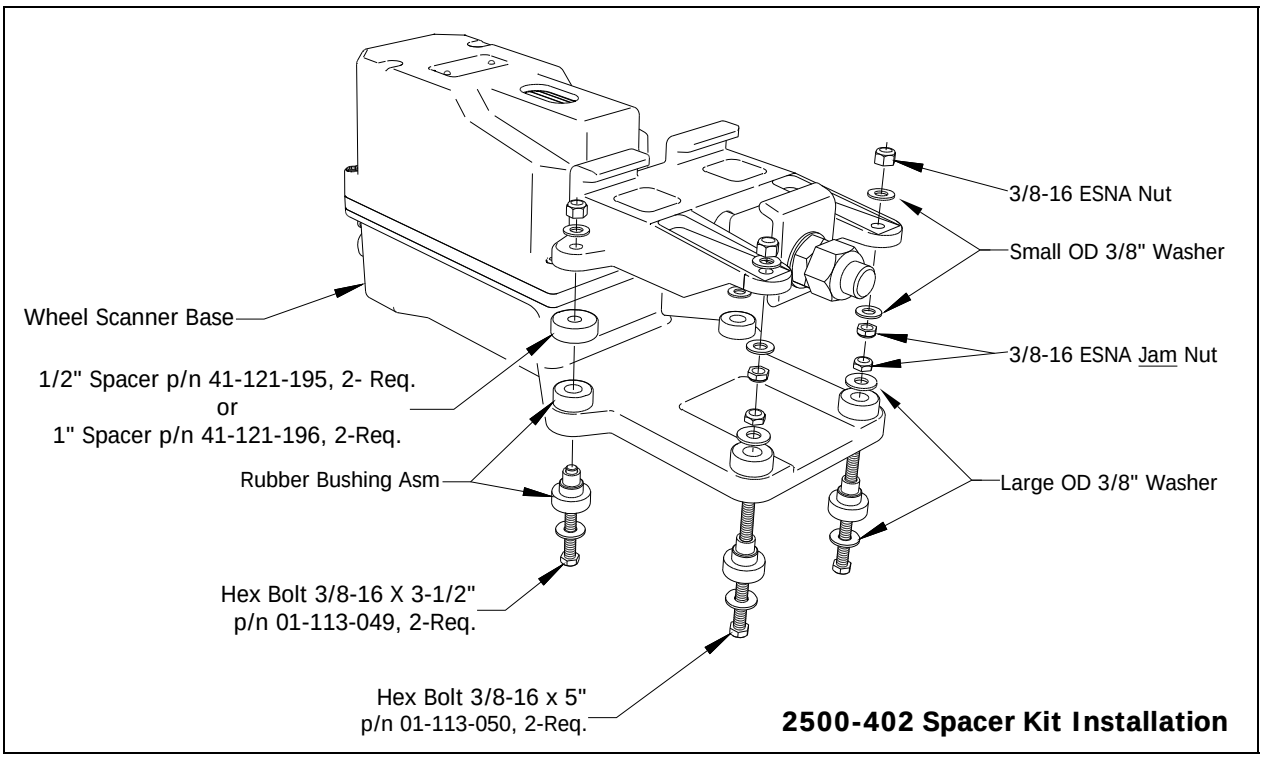

2500-402 Spacer Kit Installation

Appendix J
Scanner Resistor Baseline Acquisition

Upon completion of autocalibration, the system will acquire the scanner resistor temperature baseline values. The process begins with a 20-minute wait period in which the resistors are allowed to cool down. The system counts down during this period, sounding a tone each minute. After the 20-minute cool down period, the system opens and closes the shutters for a period of 8 minutes.

NOTE: For wheel scanners, it is imperative that the red filter frame be replaced immediately after autocalibration has disengaged and before resistor baseline acquisition begins.

The reason for establishing the baseline tables at the end of the Auto-Cal cycle is the assumption that the system is then at its peak operating efficiency. The system is freshly calibrated and the lenses are clean. With the baselines established, the system can then recognize and compensate for slight degradations of the lens caused by moisture or dirt accumulation on the lens surface.

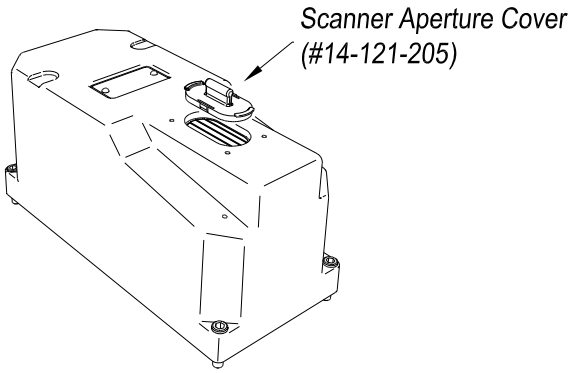

J.1 Cover the Scanners

Covering the openings of all four scanners during the baseline establishment routine should result in a more accurate baseline measurement because the reference for the scanner is stable when covered. If you initiate a baseline measurement on a partly sunny day or partly cloudy night, the odds are that for one part of the test you will see clear sky, and for another part of the test you may well be looking at a cloud. Clouds are warmer than clear sky. When clear sky is the reference for the scanner, the recorded heat values tend to be higher than when the scanner references off of a cloud. STC has observed as much as 40 degrees difference. This condition can result in an unusable baseline. If you block the scanners view of the sky completely, you wind up with a very stable reference and a resulting stable baseline.

Depicted above, the Scanner Aperture Cover (#14-121-205) is designed specifically to use during the baseline resistor test. If these covers are unavailable, a piece of corrugated cardboard or a small piece of 1/4 inch plywood about 6 inches square placed over the scanner openings does a pretty good job of providing a stable reference and it will simply blow away if a train slips up on you. A 6 inch 2x4 block laid on the opening will work on windy days, and will probably vibrate off if a train catches you. This is a helpful hint for improving performance of the baseline acquisition process, not a requirement.

WARNING: Extreme caution must be taken to avoid a situation where field personnel are trying to quickly clear 4 scanners in front of a train.

J.2 Bungalow Speaker Announcements

During the resistor-cooling period, the system voices the following announcements through the speaker (not broadcast over the radio):

- A beep sounds once per minute until two minutes before the resistor test.
- At two minutes until the test, "Scanner resistor test beginning in 2 minutes" is voiced.
- At one minute until the test, "Scanner resistor test beginning in 1 minute" is voiced.

After the resistor cooling period:

- As the test begins, "Testing" is voiced. During this time, the word PENDING appears in the status column of the Resistor Baseline Data report. To view this report select the **Resistor Baseline Data** option from the System Functions Menu.
- If the test was successful, "System working" is voiced. The word VALID appears in the status column of the Resistor Baseline Data report, signifying that the baseline test applies to each passing train.
- If the test wasn't successful, "Scanner resistor test beginning in two-zero minutes" is voiced, meaning that the system will try once more after 20 minutes to acquire an accurate resistor heat profile. During this time, the word PENDING appears in the status column of the Resistor Baseline Data report. If the test fails a second time, the word INVALID appears in the same column. The system applies the interim integrity test to each passing train while either PENDING or INVALID appears.

```
Resistor Data
-------------------------------------------------------------------------------------------
VOLTS AMB DATE     TIME  STATUS   30  40  50  60  70  80  90 100 110 120 130     Offset
      140 160 180 200 220 240 260 280 300 320 340 360 380 400 420 440 460 480
-------------------------------------------------------------------------------------------
Rail 1 (Type III)
24.5   36 12/13/17 14:56 VALID   208,238,262,277,282,282,282,282,282,282,282
      282,282,282,282,282,282,282,282,282,282,282,282,282,282,282,282,282,282       18
Rail 2 (Type III)
24.5   36 12/13/17 14:56 VALID   200,233,262,277,281,281,281,281,281,281,281
      281,281,281,281,281,281,281,281,281,281,281,281,281,281,281,281,281,281       19
Wheel 1 (Type III)
24.5   36 12/13/17 14:56 VALID   220,242,270,277,276,286,293,296,305,309,306
      315,320,326,329,338,340,340,343,348,300,300,300,300,300,300,300,300,300       20
Wheel 2 (Type III)
24.5   36 12/13/17 14:56 VALID   200,231,267,281,288,292,306,308,326,326,328
      330,336,342,354,354,361,365,368,366,300,300,300,300,300,300,300,300,300       24
```

J.3 Processing Resistor Baseline Results

Here are the two rules the system uses:

- If any of the samples in the baseline table are less than or equal to 40°F, we consider the baseline to be invalid.
- The next sequential sample has to increase or be no more than 6°F cooler than the last sample. For example, if a temperature sample is 100°F, the next sample must be 94°F or greater.

If the system gets an invalid baseline, or gets interrupted, it will automatically try a second time. The 300° F temperatures that occasionally show up in the baselines are more a reflection of the duty cycle controller for the shutter resistor. Some controllers cause the shutter resistors to heat up more quickly and overshoot the desired set point, whereas a controller operating at its optimum efficiency will ramp up to a value slightly below 300° F. Temperatures above 300° F do not result in an invalid baseline.

Look at the Resistor Data section of the System Status Report. INVALID indicates that the system has tried twice and could not acquire valid resistor data. If any of the baseline results for a scanner show INVALID, the only way to capture a new baseline is to run the Auto Cal process again. If the word PENDING appears in the status column, the system is waiting for the resistors to cool before acquiring resistor data or for the battery to charge to 13 volts (12V system) or 26 volts (24V system). INVALID indicates that the system has tried twice and could not acquire valid resistor data. In either case, the system will apply the interim integrity test to passing trains, which doesn't require resistor baseline data.

Examples: Resistor Baseline Results

```
   Resistor Data
   ---------------------------------------------------------------------------
VOLTS AMB DATE     TIME  STATUS   30  40  50  60  70  80  90 100 110 120 130
     140 160 180 200 220 240 260 280 300 320 340 360 380 400 420 440 460 480
-----------------------------------------------------------------------------
RAIL 1
15.3 -008 01/11/12 12:53 INVALID 300,300,300,300,300,300,300,300,300,300,300
     300,300,300,300,300,300,300,300,300,300,300,300,300,300,300,300,300,300
RAIL 2
15.3 -008 01/11/12 12:53 INVALID 300,300,300,300,300,300,300,300,300,300,300
     300,300,300,300,300,300,300,300,300,300,300,300,300,300,300,300,300,300
WHEEL 1
15.3 -009 01/11/12 12:26 VALID   155,152,155,152,150,150,149,149,148,147,147
     148,149,150,149,150,151,150,151,151,151,151,151,150,151,152,152,152,154
WHEEL 2
15.3 -009 01/11/12 12:26 VALID   160,156,157,162,157,157,155,155,156,155,156
     154,156,157,158,157,158,157,158,158,160,160,158,158,160,160,160,160,158
=============================================================================
```

```
   Resistor Data
   ---------------------------------------------------------------------------
VOLTS AMB DATE     TIME  STATUS   30  40  50  60  70  80  90 100 110 120 130
     140 160 180 200 220 240 260 280 300 320 340 360 380 400 420 440 460 480
-------------------------------------------------------------------------------
RAIL 1
13.4  057 09/30/11 11:59 INVALID 285,285,289,294,289,288,289,288,287,287,288
     287,289,290,290,272,270,277,294,297,297,297,298,300,300,300,300,300,300
RAIL 2
13.4  055 09/30/11 10:50 VALID   272,271,274,280,277,275,270,264,262,264,271
     277,278,282,284,285,287,283,280,272,271,270,269,268,269,270,268,269,271
WHEEL 1
13.4  055 09/30/11 10:50 VALID   145,148,154,155,156,157,156,156,157,160,158
     160,160,162,161,164,162,164,168,163,158,163,160,167,168,171,171,167,169
WHEEL 2
13.4  055 09/30/11 10:50 VALID   128,132,137,137,138,137,141,138,138,141,140
     141,142,142,144,144,145,148,147,147,148,147,147,148,147,148,149,150,151
===============================================================================
```

```
   Resistor Data
   ---------------------------------------------------------------------------
VOLTS AMB DATE     TIME  STATUS   30  40  50  60  70  80  90 100 110 120 130
     140 160 180 200 220 240 260 280 300 320 340 360 380 400 420 440 460 480
-------------------------------------------------------------------------------
RAIL 1
13.5  061 05/25/11 15:25 VALID   242,251,258,263,264,265,267,268,268,270,271
     272,275,277,278,280,281,283,284,284,284,285,287,287,288,287,287,287,289
RAIL 2
13.5  061 05/25/11 15:25 VALID   262,268,274,282,282,282,282,283,284,285,285
     288,289,291,294,296,297,297,298,300,300,300,300,300,300,300,300,300,300
WHEEL 1
13.7  063 06/27/11 14:09 INVALID 112,116,117,117,116,116,114,114,112,112,111
     110,112,111,112,114,110,104,100, 96, 94, 85, 87, 76, 69, 63, 61, 63, 58
WHEEL 2
13.7  063 06/27/11 14:09 INVALID 135,  2,  2,  2,  2,  2,148,  2,  2,  2,  2
       2,  2,  2,  2,  2,  2,  2,  2,  2,  2,  2,  2,  2,  2,  2,  2,  2,  2
===============================================================================
```

Appendix K Communications Ports

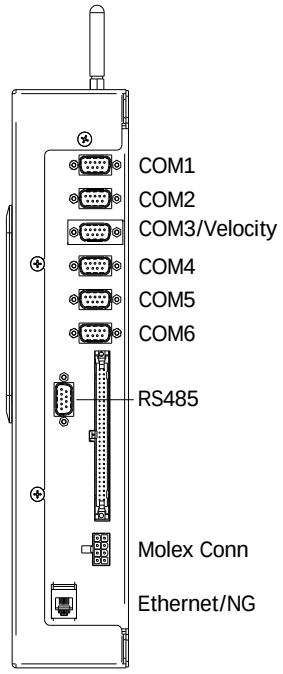

NOTE: The factory default setting for serial ports COM1-COM6 is 19,200 baud. The default setting for the RS485 port is 9,600 baud.

COM1 Error! Bookmark not defined. – To use the serial interface, connect a local computer (DTE) using a crossover (null-modem) cable and set the communications software to use full duplex.
This is the standard local access port.

COM2, COM4, & COM6 - Currently unused.

COM3 – Used to communicate with the Velocity Modem board's instruction set and database. COM3 is connected to Port 2 on the Velocity Modem board.

COM5 – At systems with AEI, attach a crossover (null-modem) cable from the AEI (DTE) Interface Module to COM5 (DTE) of the Controller module.

RS485 – Used to communicate with auxiliary equipment such as wind monitor.

ETHERNET – To establish an Ethernet connection, you need a network interface card (NIC) in your computer and a Category 5 (CAT5) 8-wire network cable for basic 10/100 functionality.

DCE (Data Circuit-Terminating Equipment) Modem				Connecting Cable	DTE (Data Terminal Equipment) Computer			Connecting Cable	DTE (Data Terminal Equipment) Computer		
Pins on the Modem		Name and Abbreviation		Inside the Straight-Through Connecting Cable	Abbr.	Pins on the Computer		*Inside the Crossover Null-Modem Connecting Cable	Abbr	Pins on the Computer	
Female DB25	DB9					Male DB25	DB9			Male DB25	DB9
1	-	Frame Ground (Chassis)	FG		FG	1	-		FG	1	-
2	3	Transmitted Data (TD)	TxD		TxD	2	3		TxD	2	3
3	2	Received Data (RD)	RxD		RxD	3	2		RxD	3	2
4	7	Request to Send	RTS		RTS	4	7		RTS	4	7
5	8	Clear to Send	CTS		CTS	5	8		CTS	5	8
6	6	Data Set Ready	DSR		DSR	6	6		DSR	6	6
7	5	Signal Ground	SG		SG	7	5		SG	7	5
8	1	Data Carrier Detect	DCD or CD		DCD or CD	8	1		DCD or CD	8	1
20	4	Data Terminal Ready	DTR		DTR	20	4		DTR	20	4
22	9	Ring Indicator	RI		RI	22	9		RI	22	9

*Note: DB25 wires 7 and 8 are straight through.
Note: The DTE to DTE interface cable is also called a null-modem, modem eliminator, or crossover cable.

Appendix L
Scanner Base Drain Hole

For scanners manufactured prior to 2013:

Where required due to water accumulation, a 0.25” drain hole can be drilled in the bottom of the scanner base.

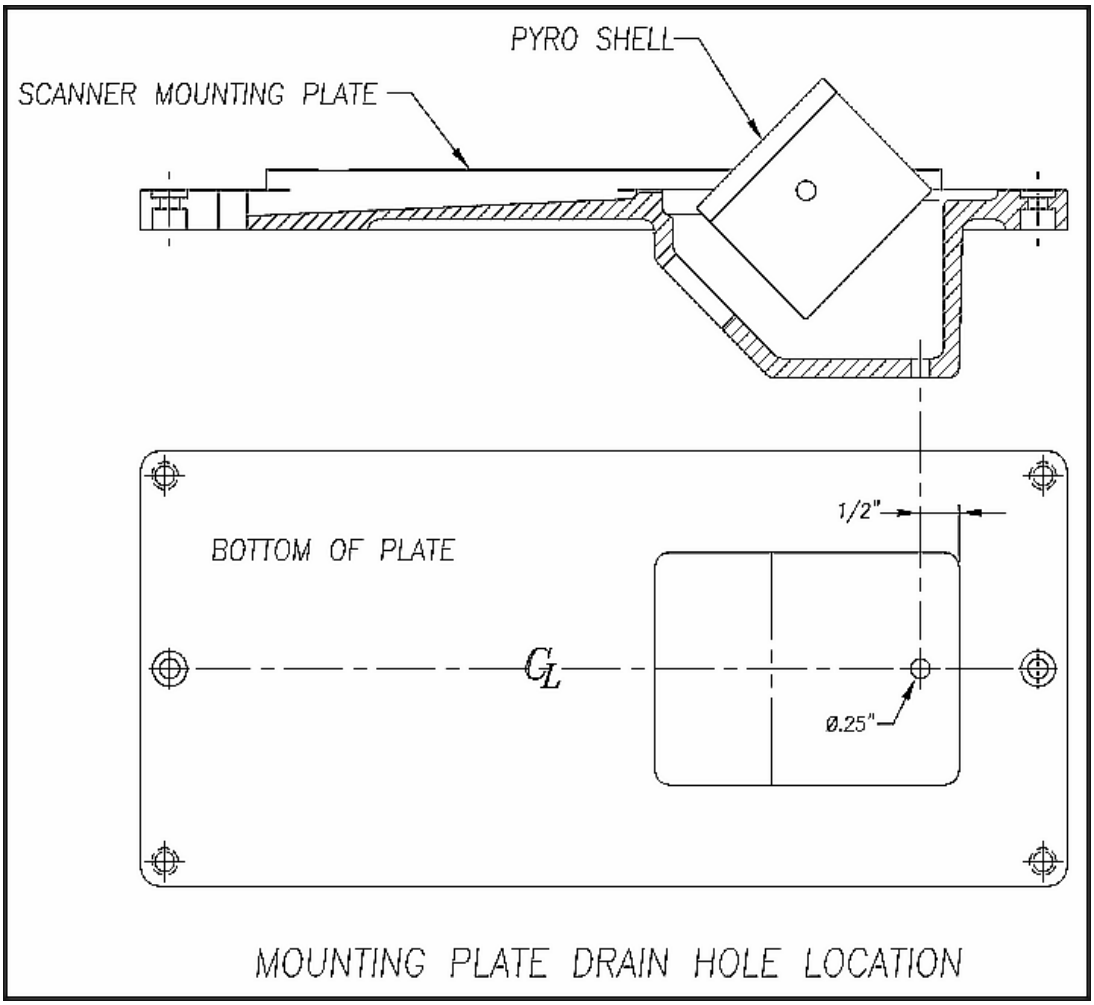

Appendix M
Calibration of Track Circuit

The following procedure provides instructions for adjusting track circuit sensitivity. This allows you to set the specified distance from the gating transducers that the SmartScanNG² will sense train presence and activate the train scanning process.

To calibrate your track circuit:

From the center of the gating transducers, measure the distance you want the track circuit to pick up the presence of a train.

1. The distance must be at least 25’ (7.62 m) and no more than 150’ (45.7 m).
2. At the point just measured, place a 0.06Ω shunt across both rails. The track must be shunted before calibration button is pressed.
3. Remove the SmartScanNG² and locate the Zepic III Presence Detector board. Press and HOLD the blue RCVR CAL button until the relay drive LED (next to Cal Button) starts blinking. Release the RCVR CAL button and the LED will stop blinking. The ZEPIC III will automatically begin the calibration process. NOTE: The track shunt MUST remain in place during the calibration process.

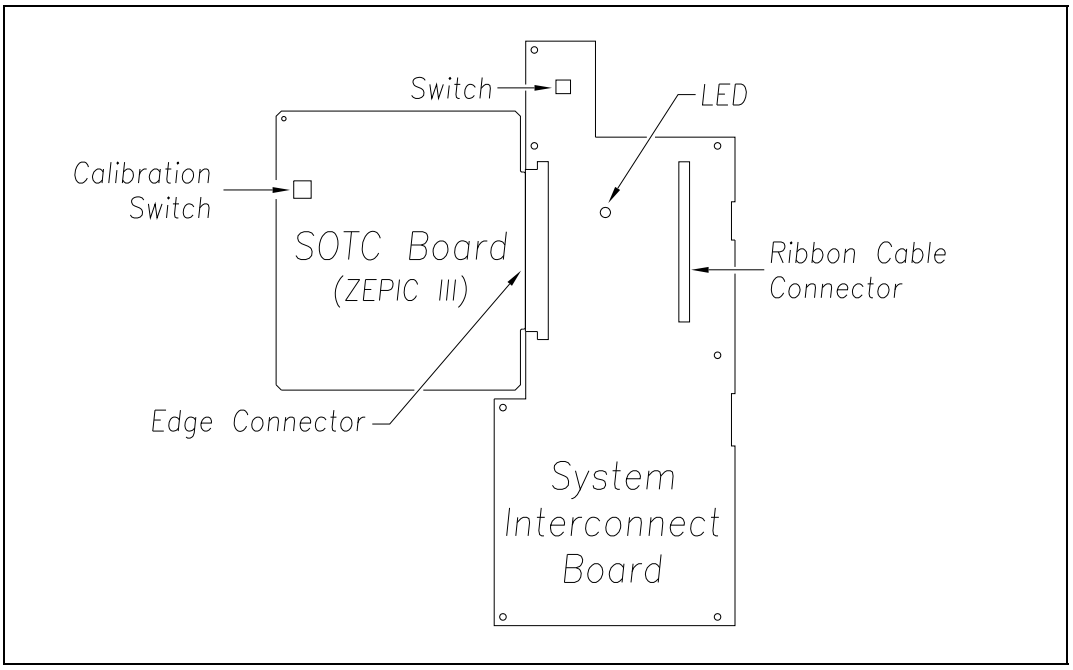

4. The relay drive will pick up (LED on) when the unit has successfully calibrated. This process can take up to 45 seconds to complete.

Verification

1. Lift the shunt, and the relay drive should drop.
2. Move the shunt 10’ farther out from the calibration point and verify the relay drive does not pick up.

IMPORTANT:
To ensure accurate activation point, always place the shunt BEFORE pressing the RCVR CAL button.

If the ZEPIC cannot achieve calibration, it will blink the relay drive LED three (3) times in rapid succession, indicating a calibration error. The unit will continuously repeat the calibration procedure (there is no need to press the blue RCVR CAL button), allowing you to troubleshoot the track circuit, wiring, and battery. Once the issue has been corrected, repeat the calibration procedure.

Because the ZEPIC III is a two-wire system, it will activate an equal distance on both sides of the track feed point.

Index

This section lists the page numbers for keywords and phrases used in this guide.

1

19,200 baud · 245
1KHz test tone · 82

A

Absolute option · 120, 127, 132
advance transducers · 189, 198, 199
AEI Diagnostic Detail report · 95, 117, 148, 151, 152
AEI option · 62, 121, 123, 124, 128, 134, 135, 138, 144, 148
AEI Reader Parameters · 66, 67
AEI tags · 121, 128
alarm
- Absolute · 17, 41, 236
- Carside Slope · 17, 51, 52, 53, 120, 123, 124, 128, 132, 134, 135, 138
- Cold Rail · 43, 44, 120, 127, 132, 190, 197, 199
- Cold Resistor · 44, 127, 190, 191, 194, 200
- Cold Wheel Scanner Resistor · 191, 195
- Dead Battery · 193, 197
- Dead Resistor · 197
- Differential · 17, 42
- Dragging Equipment · 21, 50
- Exception · 62, 128, 129, 130, 133
- High-Load · 21, 22, 50
- Highrange Transducer Miscounts · 192, 193, 197, 198
- Hotbox · 127
- Hotwheel · 21, 42, 51, 123, 127, 134
- Integrity Failure · 192, 199, 200
- Low Battery · 193, 197
- Midrange Transducer Miscounts · 193, 198
- No Approach Track · 174, 189
- Pyrometer Noise Filtered Rail · 193
- Pyrometer Noise Filtered Wheel · 194
- Pyrometer Saturation · 17, 236, 237
- Rail Resistor Test Overridden · 191, 194
- Reverse Direction Detected · 194
- Short Train · 195
- Stuck Dragger During Train Passage · 199
- Stuck Dragger Pretrain · 198
- Stuck High Load Detector Pretrain · 22, 199
- Stuck Wide Load Detector Pretrain · 22, 199
- Successive Cold Rails Exceeded · 43, 190, 199
- Successive Cold Resistors Exceeded · 43, 44, 191, 200
- Successive Cold Wheel Resistors Exceeded · 191, 195
- Test Train · 195
- Train Present on Restart · 200
- Very Slow Train · 176, 192, 193, 198, 200
- Wheel Resistor Test Overridden · 195

Wide-Load · 22, 49, 51
Alarm Limits submenu · 156, 192, 198
Alarm Settings menu · 21, 39, 40, 41, 42, 43, 44, 120, 127, 128, 132, 144
Alarms
AC Power Is Off · 189
Carside Slope · 157, 158, 198
Dead Battery · 158
Efficiency Test Panel in Use alarm · 192
Equal Heats Test Failed · 192, 198
Exception Alarm · 159, 166, 167
High-Load alarm · 166, 167
Hotbox alarm · 158, 161, 162, 165
Hotwheel alarm · 161, 165, 166
Max Equal Heat Test Failures Exceeded · 192, 198
alignment · 169, 170
ambient temperature · 19, 21, 41, 42, 43, 54, 57, 60, 61, 90, 121, 126, 143, 150
ancillary messages · 60, 158, 159, 160, 161, 167, 168
Announce Axles option · 60
Announce Car Identification option · 62
Announce Customer Name option · 62
Announce Left-Right Alarm Reference option · 62
Announce Power Off option · 61
Announce Slow Train option · 14, 61
Announce Speed option · 60
Announce Temperature option · 61
Announce Train Length option · 61
announcements · 75, 156, 157, 161, 163, 164, 167, 168
antenna · 128
arrival message · 156
attenuation plug · 201
autocalibration · 26, 57, 83, 90, 181, 211, 213, 215, 218, 219, 221, 223, 225, 228, 229
auxiliary alarm · 164
Auxiliary alarms · 21
Axle Alarm Summary · 128
axle count · 60, 158, 176, 177, 179
axle number · 129, 151
Axle Scanning · 16

B

ballast · 170
baseline resistor integrity · 89, 127
battery charger · 171, 172, 173, 184
battery temperature probe · 171
baud rate · 32, 212, 217, 222, 227
bearing scanners · 7, 13, 17, 18, 21, 121, 126, 129, 176, 201, 205, 235

C

calibrated heat source · 26, 211, 212, 215, 216, 217, 219, 221, 222, 225, 226, 227, 229
Clear Event Log option · 85
clearance mode · 54
clearance type · 54
Cold Trains · 192
COM1 · 32, 71, 117, 212, 217, 222, 227, 245
COM2 · 227
COM3 · 31
COM5 · 245
correction factor · 19, 127, 191

D

Date and Time · 36
default setup parameters · 68, 70
Delete All Stored Train Data option · 84
directory · 133
Display Panel · 23
double-track site · 160
Dragger option · 21, 50
Dragging Equipment Detector · 157, 163, 164
DTMF · 64

E

Efficiency Test panel · 29, 192
Equipment Settings menu · 21, 22, 42, 49, 50, 51, 52, 53, 54, 56, 57, 58, 59, 62, 120, 121, 123, 124, 128, 129, 132, 144
Equipment submenu · 55
error message · 55, 56, 64
Event Log · 85, 95, 112, 117, 153, 154
Exception Detail report · 117, 130, 134, 135, 137, 138, 140
Exception Summary report · 117, 130, 133, 134
Exceptions directory · 84, 130

F

float voltage · 172, 173, 184
fuse block · 171, 172

G

Gate Distance option · 49, 57
gating transducers · 13, 14, 15, 16, 17, 19, 20, 57, 129, 151, 174, 176, 177, 183, 192, 193, 194, 197, 198, 200

H

Harriman Dispatch Center · 132
heaters · 13, 54, 55, 56, 231
Holdoff · 155
Holdoff timer · 155

I

Integrity Failure · 159, 160, 161, 162, 167, 168, 192, 193, 198, 199, 200

K

Keypad · 24

L

Lens Cleaning · 231

M

Main menu · 212, 215, 218, 219, 222, 225, 228, 229
Maintenance email list · 88
Messages menu · 155
Messages submenu · 158, 159, 166, 167
milepost · 160, 166
milepost/kilometer post · 38
modem · 212, 217, 222, 227
mounting plate · 205, 206, 207, 208, 209, 216, 227, 231, 232
MPRR · 66

N

Network Menu · 26
Network Settings · 72
no-defects message · 159

O

OLED · 24
optics · 215, 219, 225, 229, 231, 233

P

Polling System submenu · 132
Post-Train Messages · 157
presence detector · 175, 249
Processor board · 23
PTT · 25
pyrometer · 26, 211, 213, 218, 221, 223, 228

R

Radio Inhibit · 81
Radio Menu · 26
Radio Test · 25, 80
rebroadcast · 158, 167, 168
Remote System Reset · 83
Replay train · 92
reports
  Abbreviated Exception Detail · 138
  AEI Diagnostic Detail · 148
  Exception Detail · 134, 160
  Exception Summary · 131
  System Status · 141
  Train Detail · 123
  Train Summary · 119

S

scanner cable · 233, 234
scanner cover · 205, 206, 208, 209, 215, 219, 225, 229, 232, 233, 234
scheduled maintenance · 169
Security Menu · 93
serial interface · 212, 215, 218, 219, 222, 225, 228, 229
Setup menu · 34
shutters · 190, 214, 215, 218, 219, 224, 225, 228, 229
single-track site · 157, 159, 161, 162, 163, 164, 165, 166, 167
snow cycle · 55
speaker · 80
Start Manual Train · 82
System Functions menu · 25, 79, 80
system health menu · 30
System Status report · 141
system warning · 23

T

Talker Mode · 75, 168
TO1 · 192, 193, 194, 197, 198
TO2 · 192, 193, 194, 197, 198
track circuit · 189, 198, 199
Track Designation · 75, 76
Track Direction · 74
train alarm · 192
Train Detail report · 123
train speed · 158
Train Summary report · 119
trip wire · 166, 167
Type II · 233, 234

U

Update Menu · 85

V

View maintenance statistics · 86
Volume Menu · 27

W

wayside enclosure · 215, 219, 225, 229
Web security settings · 89, 90, 91
web user interface · 95
wheel scanners · 205
WiFi · 95

Z

Zepic III · 175, 249